LOYALHANNA APARTMENT

RENOVATIONS

PREPARED FOR

WESTMORELAND COUNTY HOUSING AUTHORITY
167 SOUTH GREENGATE ROAD
GREENSBURG, PENNSYLVANIA 15601

MECHANICAL, ELECTRICAL, PLUMBING REBID

MAY 6, 2019

RWS PROJECT No. R17-077-04

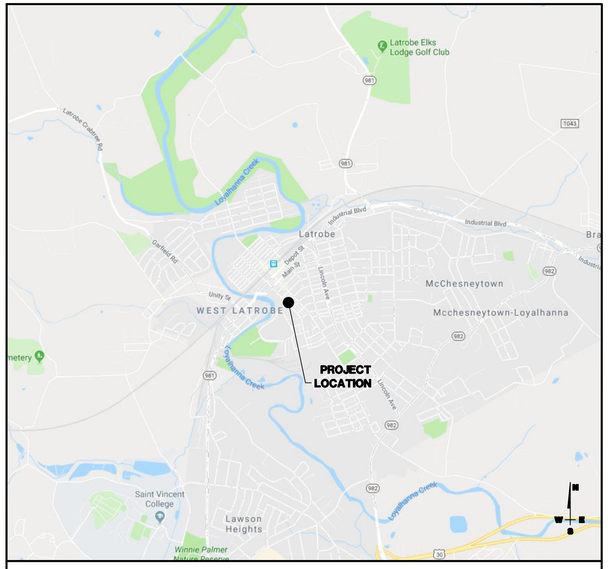

SITE LOCATION
1111 JEFFERSON STREET
LATROBE, PENNSYLVANIA 15650

Michael L. Washowich - Executive Director
Walter C. Kaminski - Deputy Executive Director
Daniel J. Wukich - Chairman
Alvin M. Ansani - Vice Chairman
Joseph H. Rollins - Treasurer
Debra J. Wohlin - Secretary
Norene Price - Member
Gene A. Ferace - Solicitor

RW SLEIGHTER
ENGINEERS & ARCHITECTS

1060 EBERLY WAY
LEMONT FURNACE, PA 15456
Phone 724.438.4010
Fax 724.438.4017
info@rwsleighter.com
WWW.RWSLEIGHTER.COM

PYRAMID
Pyramid Engineering, PC
PO Box 3233, 300 Fifth Ave, Altoona, PA 16603
814-946-9910 fax: 814-946-9915

DRAWING INDEX

G-001 COVER

Civil

C-001 SITE LEGEND
C-002 EXISTING SITE PLAN
C-003 SITE DEMOLITION PLAN
C-100 NEW SITE PLAN
C-500 SITE DETAILS
C-501 MONUMENT SIGN

Architectural

AD-101 DEMOLITION FLOOR PLANS
A-101 FIRST FLOOR PLAN
A-102 TYPICAL FLOOR PLAN
A-201 ELEVATIONS
A-202 ELEVATIONS
A-203 ELEVATIONS
A-501 CANOPY DETAILS
A-601 ENLARGED APARTMENT PLAN - TYPE 'A'
A-602 ENLARGED APARTMENT PLAN - TYPE 'B'
A-603 ENLARGED APARTMENT PLAN - UFAS APARTMENT
A-604 ENLARGED FIRST FLOOR PLANS
A-701 CASEWORK SECTIONS
A-702 CORRIDOR ELEVATIONS
A-703 TYPICAL MOUNTING HEIGHTS, DETAILS AND ELEVATIONS
A-801 WINDOW AND PATIO DOOR DETAILS
A-901 REFLECTED CEILING PLANS
A-902 TYPICAL CORRIDOR REFLECTED CEILING PLAN

Mechanical

M-001 HVAC - SYMBOLS & ABBREVIATIONS
M-101 HVAC - FIRST FLOOR PLAN
M-102 HVAC - 2ND-8TH FLOOR PLANS
M-201 HVAC - ROOF PLANS
M-301 MECHANICAL - ENLARGED PLANS

Plumbing

P-001 PLUMBING - NOTES, LEGENDS AND DETAILS
P-201 PLUMBING PLANS
P-301 PLUMBING - ENLARGED PLANS

Electrical

E-301 ELECTRICAL - LIGHTING & POWER PLAN
E-302 ELECTRICAL - ENLARGED LIGHTING & POWER PLANS

P:\077 - Westmoreland County Housing Authority\R17-077-04 - WCHA Loyalhanna\Dwg\Sheets\G-001.dwg, Date: 5/6/2019 4:43:33 PM, Plotted By: SEAN KEFFER

LINETYPES

	SUBJECT PROPERTY LINE
	ADJOINING PROPERTY LINE
	BUILDING SETBACK LINE
1150	EXISTING CONTOUR-MAJOR
	EXISTING CONTOUR-MINOR
1015	NEW CONTOUR-MAJOR
	NEW CONTOUR-MINOR
C	EXISTING OVERHEAD CABLE LINE
DC	DEMO OVERHEAD CABLE LINE
C	NEW OVERHEAD CABLE LINE
FO	EXISTING FIBER OPTIC LINE
DFO	DEMO FIBER OPTIC LINE
FO	NEW FIBER OPTIC LINE
T	EXISTING OVERHEAD PHONE LINE
DT	DEMO OVERHEAD PHONE LINE
T	NEW OVERHEAD PHONE LINE
T	EXISTING UNDERGROUND PHONE LINE
DT	DEMO UNDERGROUND PHONE LINE
T	NEW UNDERGROUND PHONE LINE
GAS	EXISTING GAS LINE
DGAS	DEMO GAS LINE
GAS	NEW GAS LINE
EPC	EXISTING UNDERGROUND ELECTRIC PHONE AND CABLE
DEPC	DEMO UNDERGROUND ELECTRIC PHONE AND CABLE
EPC	NEW UNDERGROUND ELECTRIC PHONE AND CABLE
E	EXISTING OVERHEAD ELECTRIC LINE
DE	DEMO OVERHEAD ELECTRIC LINE
E	NEW OVERHEAD ELECTRIC LINE
E	EXISTING UNDERGROUND ELECTRIC LINE
DE	DEMO UNDERGROUND ELECTRIC LINE
E	NEW UNDERGROUND ELECTRIC LINE
SAN	EXISTING SANITARY LINE
DSAN	DEMO SANITARY LINE
SAN	NEW SANITARY LINE
FM	EXISTING SANITARY FORCE MAIN
DFM	DEMO SANITARY FORCE MAIN
FM	NEW SANITARY FORCE MAIN
ST	EXISTING STORM SEWER LINE
DST	DEMO STORM SEWER LINE
ST	NEW STORM SEWER LINE
WTR	EXISTING WATER LINE
DWTR	DEMO WATER LINE
WTR	NEW WATER LINE
	EXISTING FENCE
	DEMO FENCE
	ORNAMENTAL FENCE
	HIGH SECURITY FENCE
	DEMO CURB
	NEW CURB
	PAVEMENT MARKING
	GUIDE RAIL
	STREAM
	SWALE
	WORK AREA

SYMBOLS

	PROPERTY CORNER
	EXISTING TREE, DECIDUOUS
	EXISTING TREE, CONIFEROUS
	CONTROL POINT
	UTILITY POLE
	UTILITY POLE GUY WIRE
	DEMO UTILITY POLE/TRANSFORMER/LIGHT
	ELECTRIC METER
AC	AC UNIT
	LIGHT POLE
WV	WATER VALVE
GV	GAS VALVE
S	SANITARY MANHOLE
D	STORM MANHOLE
	STORMWATER INLET
	STORMWATER INLET
	CLEANOUT
WM	WATER METER
GM	GAS METER
	FIRE HYDRANT
	PIPE CAP
	SIGN
	BOLLARD
	RETAINING WALL
X0000.00	SPOT ELEVATIONS
X	ANYTHING WITH X TO BE DEMOLISHED
	GEOTECHNICAL BORINGS
	INFILTRATION TEST
N.I.C.	NOT IN CONTRACT
BC 999.99 TC 999.99	EXISTING ELEVATION, BOTTOM/TOP OF CURB ELEVATION
BC 999.99 TC 999.99	PROPOSED ELEVATION, BOTTOM/TOP OF CURB ELEVATION
3 — 3	KEY NOTE

ABBREVIATIONS

ARCH	ARCHITECTURAL
BC	BOTTOM OF CURB
BW	BOTTOM OF WALL
C	OVERHEAD CABLE LINE
CO	CLEAN OUT
CMP	CORRUGATED METAL PIPE
CPP	CORRUGATED PLASTIC PIPE
CPT	CONTROL POINT
DC	DEMO OVERHEAD CABLE LINE
DE	DEMO OVERHEAD/UNDERGROUND ELECTRIC LINE
DFO	DEMO FIBER OPTIC LINE
DI	DROP INLET
DIA.	DIAMETER
DMH	DRAINAGE MANHOLE
DEPC	DEMO UNDERGROUND ELECTRIC PHONE AND CABLE
DGAS	DEMO GAS LINE
DSAN	DEMO SANITARY LINE
DST	DEMO STORM SEWER LINE
DT	DEMO OVERHEAD/UNDERGROUND PHONE LINE
DWTR	DEMO WATER LINE
E	ELECTRIC LINE
EPC	ELECTRIC PHONE AND CABLE
FF	FINISHED FLOOR
FM	FORCE MAIN
FO	FIBER OPTIC LINE
GV	GAS VALVE
IP	IRON PIN
LOD	LIMITS OF DISTURBANCE
LP	LIGHT POLE
MO	MIDDLE ORDINATE
MH	MANHOLE
NIC	NOT IN CONTRACT
NTS	NOT TO SCALE
OH	OVERHEAD
PC	POINT OF CURVATURE
P.C.	PROPERTY CORNER
PI	POINT OF INTERSECTION
POB	POINT OF BEGINNING
POT	POINT ON TANGENT
PT	POINT OF TANGENCY
R	RADIUS
RECP	ROLLED EROSION CONTROL PRODUCTS
SAN	SANITARY SEWER
SMH	SANITARY MANHOLE
ST	STORM SEWER
STA	STATION
T	PHONE LINE
TC	TOP OF CURB
TW	TOP OF WALL
TYP.	TYPICAL
TPT	TURNING POINT
UG	UNDERGROUND
WTR	WATER LINE
WV	WATER VALVE
WWR	WELDED WIRE REINFORCING

MATERIALS

	DEMO ASPHALT
	MILL
	OVERLAY
	BASE REPAIR
	DEMO CONCRETE
	NEW CONCRETE
	HEAVY DUTY CONCRETE
	DEMO BUILDING
	EXISTING BUILDING
	NEW BUILDING
	LANDSCAPE MULCH

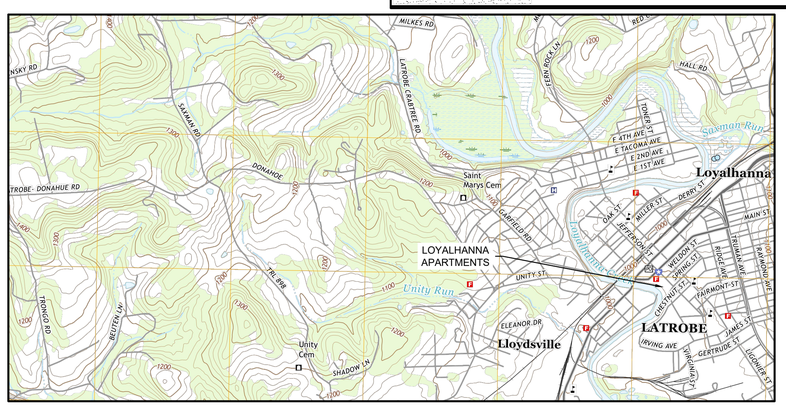

LOYALHANNA APARTMENTS
1111 JEFFERSON STREET
LATROBE, PA 15601

SITE CONCRETE NOTES

1. Contractor is responsible to visit the site, review the contract documents, and verify the quantities of work to be performed.
2. New sidewalks shall be a minimum 4" thick, 4000 psi concrete. Heavy duty concrete shall be installed where vehicular traffic is expected.
3. Control joints shall be spaced evenly & installed as shown on drawings.
4. Expansion joints in sidewalks shall be installed on a maximum 50' spacing.
5. When control joint, expansion joint, and construction joint locations are not specifically shown on drawings contractor shall prepare a shop drawing indicating the intended layout of joints for approval.
6. Seal all cold joints in concrete and all joints between new concrete and existing work with approved caulking. All concrete joints requiring caulking shall be finished with a radius edging tool.
7. Exterior concrete shall be sealed with an approved product.
8. Slope pavement and sidewalks to ensure positive drainage to drainage structures or daylight and ensure no ponding of water.
9. All proposed sidewalks slope toward the street/parking area at 1.0% perpendicular to the direction of travel.
10. Where concrete curbs are to be replaced adjacent to an existing pavement, contractor shall remove and replace a minimum 18-inch width of the existing pavement. Where a new curb is adjacent to a concrete street, an integral curb and gutter shall be installed.
11. Where new concrete abuts a building, existing concrete slab or curb, the new concrete shall be doweled into the adjacent work. Refer to expansion joint detail.

DETAIL SYMBOLS

MATCH LINE
SEE SHEET C-201 — **MATCH LINE**

N / W E / S — **NORTH ARROW**

1 / C-XXX — ELEVATION NUMBER, SHEET NUMBER — **ELEVATION CALLOUT**

1 / C-XXX — DETAIL NUMBER, SHEET NUMBER — **DETAIL CALLOUT**

1 / C-XXX — SECTION NUMBER, SHEET NUMBER — **SECTION CALLOUT**

PENNSYLVANIA ONE CALL

811 Know what's below. Call before you dig.

BEFORE YOU DIG ANYWHERE IN PENNSYLVANIA CALL PA ONE-CALL AT 1-800-242-1776 TOLL FREE FOR ACTUAL FIELD LOCATIONS.

SERIAL NUMBER(S)

PENNSYLVANIA ACT 38 (1991) AND SUBSEQUENT AMENDMENTS REQUIRES NO LESS THAN 3 WORKING DAYS NOTICE FROM EXCAVATORS WHO ARE ABOUT TO DIG, DRILL, BLAST, AUGER, BORE, GRADE, TRENCH OR DEMOLISH WHEN IN THE CONSTRUCTION PHASE.

SITE INFORMATION

Property Owner:
Westmoreland County Housing Authority
154 S. Greengate Road
Greensburg, PA 15601

Parcel #: 15-03-10-0-066
Parcel Area: 1.393 acres
Zoning: C4 Heavy Commercial

Site Address: Loyalhanna Apartments
1111 Jefferson St.
Latrobe, Pa. 15650

GENERAL NOTES

1. Do not scale drawings.
2. The General Contractor (GC) is responsible for all work indicated on these plans unless otherwise noted.
3. The GC shall coordinate the work of the other prime contractors including the Electric Contractor (EC) and Plumbing Contractor (PC).
4. Install materials and products in accordance with the manufactures latest written recommendations.
5. Contractors are responsible to coordinate with utility providers and/or owners to verify the locations of existing utility lines. The locations of utilities shown on the drawings are approximate and the contractors are solely responsible to field locate all utilities.
6. Utility companies represented in these documents may not be all the utility providers involved. They are provided as a convenience. The contractor is responsible to notify and coordinate work with the utility companies.
7. Contractor shall contact the Pennsylvania one call system a minimum of three days prior to digging.
8. Contractor shall regrade, install topsoil, and reseed all lawn areas affected by work activities.
9. No onsite waste or stockpile locations are available.
10. Erosion and sediment controls shall be in place prior to beginning work. Refer to the Erosion and Sediment Control Plan.
11. Contractors shall perform all work in accordance with Local, State, and Federal environmental regulatory agency requirements and standards.
12. Contractors shall obtain all necessary permits for demolition and construction.
13. Contractors are responsible to keep public and private roads and parking areas clean of mud, dirt, debris, etc. from construction activities. These shall be maintained daily.
14. A geotechnical investigation was not performed for this project.
15. Contractors are responsible to coordinate and pay for all testing and inspections required by the specifications, utility providers, and authorities having jurisdiction.
16. Contractors shall thoroughly review all plan drawings, notes, and specifications to understand the intent of the project. The contractors shall provide all labor, equipment, and materials necessary to complete the intent of the project. All discrepancies shall be reported to the engineer prior to bid submission.
17. All demolition debris, waste material, excess fill, trees, limbs, roots, rubbish, and trash is to be containerized on site as generated.
18. The general contractor shall provide and maintain roll-off box(es) and/or dumpster(s).
19. The general contractor shall immediately remove from the site, transport and dispose at an approved off site disposal facility, all roll-off box(es) and/or dumpster(s) when full. This may include but not be limited to building demolition debris.
20. The owner shall be given the opportunity to collect and retain at their facility any items to be removed on this project. this may include but not be limited to doors, plumbing fixtures, light fixtures, etc. contractor(s) shall coordinate demolition work with, and notify the owner, prior to removal of items from site.
21. Field verify all existing conditions including, but not limited to: dimensions, locations of plumbing lines and fixtures, electric lines and fixtures and hvac equipment. Contractors are responsible for reviewing the complete set of construction documents and field conditions to determine the full scope of work required.
22. Drawings are the graphic and pictorial portions of the contract documents showing the design, location and dimensions of the work. Contractors are to refer to the specifications for the written requirements for materials, equipment, construction systems, standards for workmanship of the work, and performance of related services.
23. The intent of the contract documents is to include all items necessary for the proper execution and completion of the work by the contractors. The contract documents are complimentary, and what is required by one shall be binding as if required by all.

ASPHALT PAVEMENT & PARKING AREAS

1. All asphalt pavement work shall be performed in accordance with Pennsylvania Department of Transportation specifications.
2. Seal all joints in asphalt per PennDOT PUB 408.
3. Saw cut existing asphalt and concrete surfaces to facilitate removal and to provide a uniform construction line for replacement.
4. Mill existing asphalt pavement to provide specified asphalt overlay in all designated areas.
5. Prior to placing pavement markings, provide a shop drawing indicating the exact spacing, dimensions, line widths, colors, symbols, etc. Contractor must receive approval of owner and engineer prior to installation.

HANDICAP ACCESSIBILITY NOTES

1. All sidewalks, accessible parking areas, and accessible paths must meet all requirements of the Uniform Federal Accessibility Standards (UFAS), Uniform Construction Code (UCC), and ANSI 117.1-2009.
2. The contractor must review and be familiar with these guidelines and verify that all work meets the accessibility requirements. Failure to comply with these standards will result in the removal and replacement of work at no additional cost to the owner.

SIDEWALKS		RAMPS	
RUNNING SLOPE	5% (1:20)	RUNNING SLOPE	8.33% (1:12)
CROSS SLOPE	2% (1:50)	CROSS SLOPE	2% (1:50)
		MAX. LENGTH	30'-0"

ACCESSIBLE PARKING

SLOPE 2% (1:50) EACH DIRECTION

LANDINGS AND CHANGES OF DIRECTION

5'X5' MINIMUM SIZE
2% (1:50) EACH DIRECTION

(ALL SLOPES ARE MAXIMUM ALLOWABLE)

RW SLEIGHTER
ENGINEERS & ARCHITECTS
1060 EBERLY WAY
LEMONT FURNACE, PA 15456
Phone 724.438.4010
Fax 724.438.4017
info@rwsleighter.com
WWW.RWSLEIGHTER.COM

CONFIDENTIAL - ALL RIGHTS RESERVED

SEAL

COMMONWEALTH OF PENNSYLVANIA — REGISTERED PROFESSIONAL — ROBERT W. SLEIGHTER — ENGINEER — NO. 045884-E

PROJECT: LOYALHANNA APARTMENT RENOVATIONS
1111 JEFFERSON STREET
LATROBE, PENNSYLVANIA 15650

OWNER: WESTMORELAND COUNTY HOUSING AUTHORITY
167 SOUTH GREENGATE ROAD
GREENSBURG, PENNSYLVANIA 15601

REVISION

NO.	DATE	DESCRIPTION

DATE	PROJECT NUMBER
FEBRUARY 22, 2019	R17-077-04

DESIGNED	DRAWN	CHECKED
DWC	RSW	RWS

SHEET NAME: SITE LEGEND

SHEET NUMBER: C-001

P:\077 - Westmoreland County Housing Authority\R17-077-04 - WCHA Loyalhanna\Dwg\Sheets\C-001 SITE LEGEND.dwg, Date: 2/22/2019 11:58:45 AM, Plotted By: IAN PIECZYNSKI

EXISTING SITE NOTES

1. Topographic survey and mapping was performed by Sleighter Engineering in May 2018. Bearings, coordinates, and control points for the proposed work is shown in the Pennsylvania State Plan Coordinate System (South Zone) and is reference to NAVD 1988 computed using geoid 2009.
2. A boundary survey was not performed by RW Sleighter for this project.
3. Underground utilities shown are based on field survey, field observations, and taken from ALTA Land Title Survey dated July 20, 2009 performed by Dennis Dull Land Surveying, North Versailles, Pennsylvania.
4. The locations of utilities shown on the drawings are approximate and the contractors are solely responsible to field locate all utilities.
5. It is the contractor's responsibility to field verify the existing conditions prior to the start of any work and to notify the engineer of any inconsistencies. Failure to notify the engineer prior to the start of construction shall constitute acceptance of the existing conditions.

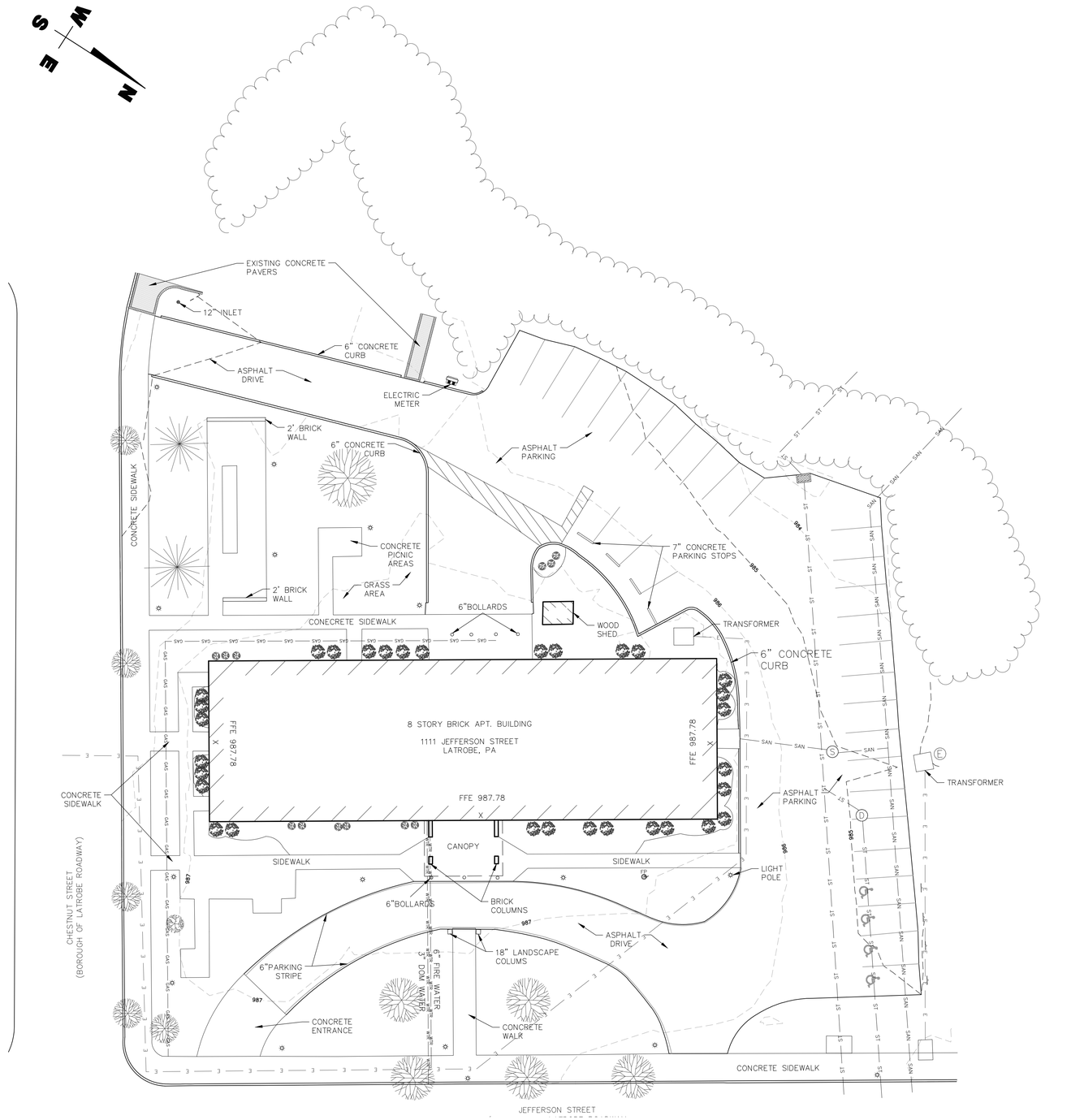

1 C-002 EXISTING SITE PLAN

SCALE: 1:20

0 20 40

SCALE IN FEET

RW SLEIGHTER
ENGINEERS & ARCHITECTS

1060 EBERLY WAY
LEMONT FURNACE, PA 15456
Phone 724.438.4010
Fax 724.438.4017
info@rwsleighter.com
WWW.RWSLEIGHTER.COM

CONFIDENTIAL - ALL RIGHTS RESERVED

SEAL

COMMONWEALTH OF PENNSYLVANIA
REGISTERED PROFESSIONAL
ROBERT W. SLEIGHTER
ENGINEER
NO. 045884-E

PROJECT
LOYALHANNA APARTMENT RENOVATIONS
1111 JEFFERSON STREET
LATROBE, PENNSYLVANIA 15650

OWNER
WESTMORELAND COUNTY HOUSING AUTHORITY
167 SOUTH GREENGATE ROAD
GREENSBURG, PENNSYLVANIA 15601

REVISION

NO.	DATE	DESCRIPTION

DATE: FEBRUARY 22, 2019
PROJECT NUMBER: R17-077-04

DESIGNED	DRAWN	CHECKED
DWC	RSW	RWS

SHEET NAME
EXISITNG SITE PLAN

SHEET NUMBER
C-002

P:\077 - Westmoreland County Housing Authority\R17-077-04 - WCHA Loyalhanna\Dwg\Sheets\C-002 EXISTING SITE PLAN.dwg, Date: 2/22/2019 12:05:18 PM, Plotted By: IAN PIECZYNSKI

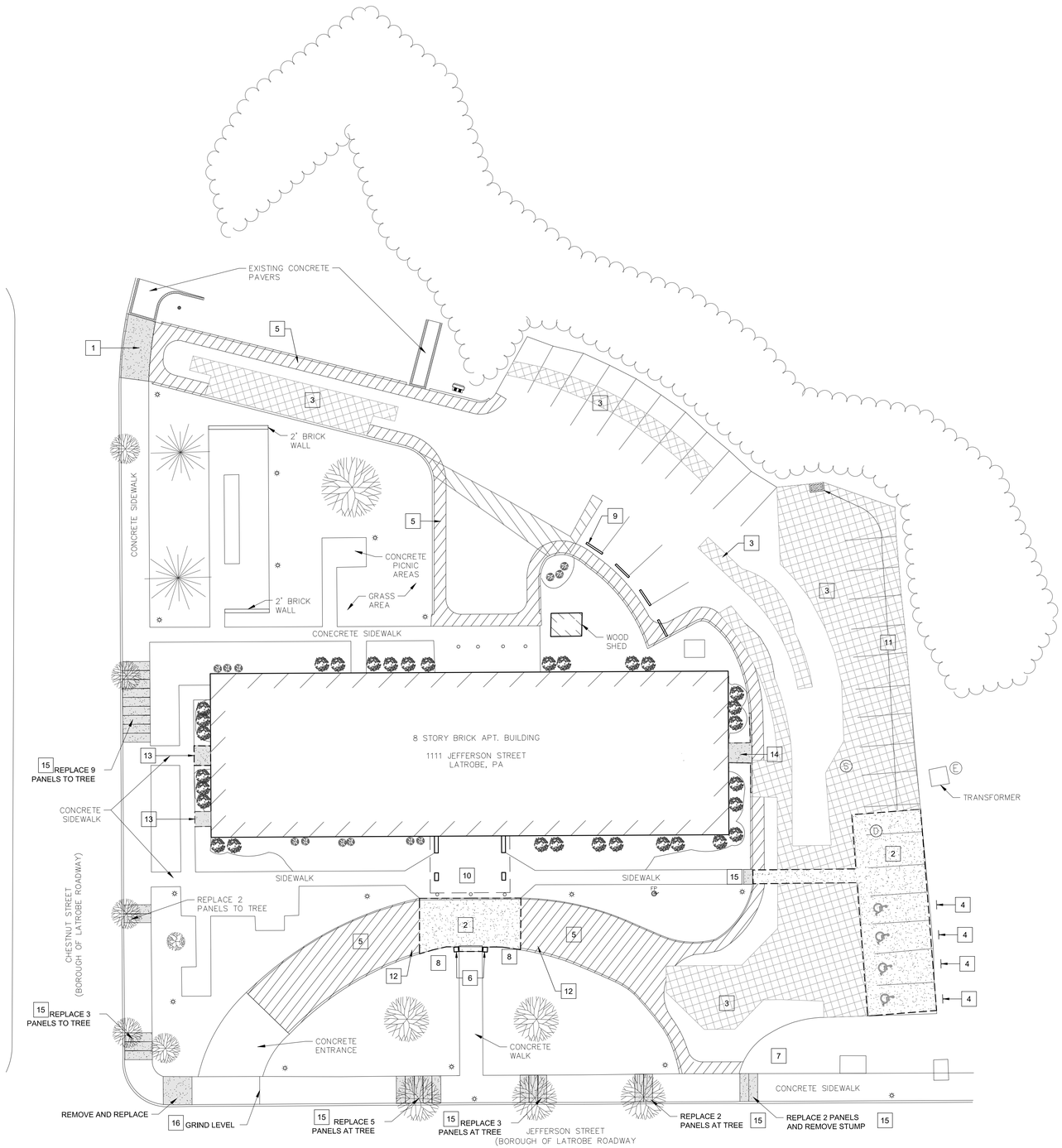

1 C-100 SITE DEMOLITION PLAN

SCALE: 1:20

0 20 40

SCALE IN FEET

BASE BID ALLOWANCES

Base Repair (refer to asphalt overlay detail 2/C-500) 850 sy

Note - Costs for these quantities are to be included in the Base Bid.
See Unit Costs specification section and Unit Costs on the Bid Form.

SITE DEMOLITION NOTES

1. All materials deemed unsuitable as fill or materials that are not necessary to achieve the final subgrade elevations shall be removed from the project site as waste materials.
2. If requested by the owner, suitable excess soil and topsoil shall be located on the owner's property as directed. Otherwise excess soil and topsoil shall be removed from the site and legally disposed.
3. Contractors shall patch existing surfaces disturbed or exposed by demolition activities to match adjacent finishes.
4. Saw cut existing concrete and asphalt pavements and curbs to be removed and/or joined by new work.
5. The demolition information provided may not represent all demolition necessary for construction. It is the responsibility of the contractors to determine the full extent of the project demolition above and below ground to complete the intent of the project.
6. Protect existing surfaces, structures, and facilities to remain.
7. Remove vegetation within the work areas unless otherwise noted. Do not disturb existing vegetation or trees outside the proposed construction area or designated to be protected. Any vegetation or tree inadvertently disturbed or damaged, shall be replaced with size and species approved by the owner.
8. Protect pavements and curbs not scheduled for demolition or necessary for construction. Any pavement or curbs inadvertently damaged or disturbed shall be replaced.
9. Protect existing utilities above and below grade unless otherwise noted.
10. Prior to demolition, clearing, or excavation, verify the locations and elevations of existing conditions, utilities, utility boxes, poles, fire hydrants, vaults, structures, etc. and notify the engineer of any inconsistencies.
11. Contractors are responsible for coordination and relocation of existing utilities that need to be relocated due to the proposed construction work. Coordinate with the appropriate utility provider and owner.
12. GC is responsible for all the installation and maintenance of all erosion and sediment controls, refer to the Erosion and Sediment Control Plan.
13. GC is responsible for the demolition and removal of all concrete and asphalt pavements including subbase, fences, gates, railings, lawns, landscaping, topsoil, signs, underground structures, conduits, piping, etc. for the installation of new work.
14. GC is responsible to remove and stockpile topsoil in the amount necessary for restoration of disturbed areas. All excess topsoil, soil, and excavated material shall be removed from the site.

SITE DEMOLITION KEYNOTES

1. Remove concrete entrance (curb and sidewalk) in accordance with the City of Latrobe requirements. Contractor to obtain a Street Opening Permit.
2. Remove asphalt pavement, subbase material, and adjust subgrade to proposed elevations, proof roll, and prepare for the installation of new work.
3. Base Repair Area - excavate +/- 18-inches below subgrade elevation to competent material, install 12" AASHTO #1 aggregate, 6" PennDOT 2A subbase aggregate, and 3" PennDOT Superpave binder course. Refer to the New Site Plan for installation of the final wearing course and finish grade elevations. Refer to the Base Bid Allowances noted on this drawing, the unit cost specification, and Base repair detail for quantity of base repair included in the project.
4. Remove all handicap parking signs, post, and foundations.
5. Mill asphalt 1.5" depth
6. Remove landscape columns and foundations
7. Remove lawn and prepare for installation of new sign
8. Remove lawn and prepare for installation of new landscaping
9. Remove wheel stops.
10. Relocate Mailboxes temporarily during construction. Coordinate location with owner and postmaster.
11. Parking Area Drainage - during installation of base repairs, provide grade adjustment of subase aggregate and base course asphalt to provide uniform slope across parking area to existing inlet.
12. Remove asphalt pavement to provide smooth, uniform transition of the pavement edge to the new concrete pavement.
13. Remove and replace concrete at entrance.
14. Remove and replace concrete pad and curbs entrance.
15. Sidewalk replacement- remove and replace concrete sidewalk.
16. Grind sidewalk joint level with adjacent concrete.

RW SLEIGHTER
ENGINEERS & ARCHITECTS
1060 EBERLY WAY
LEMONT FURNACE, PA 15456
Phone 724.438.4010
Fax 724.438.4017
info@rwsleighter.com
WWW.RWSLEIGHTER.COM

CONFIDENTIAL - ALL RIGHTS RESERVED

SEAL

COMMONWEALTH OF PENNSYLVANIA
REGISTERED PROFESSIONAL
ROBERT W. SLEIGHTER
ENGINEER
NO. 045884-E

PROJECT
LOYALHANNA APARTMENT RENOVATIONS
1111 JEFFERSON STREET
LATROBE, PENNSYLVANIA 15650

OWNER
WESTMORELAND COUNTY HOUSING AUTHORITY
167 SOUTH GREENGATE ROAD
GREENSBURG, PENNSYLVANIA 15601

REVISION

NO.	DATE	DESCRIPTION

DATE: FEBRUARY 22, 2019
PROJECT NUMBER: R17-077-04

DESIGNED	DRAWN	CHECKED
DWC	RSW	RWS

SHEET NAME
SITE DEMOLITION PLAN

SHEET NUMBER
C-003

P:\077 - Westmoreland County Housing Authority\R17-077-04 - WCHA Loyalhanna\Dwg\Sheets\C-003 DEMO SITE PLAN.dwg, Date: 2/22/2019 12:07:59 PM, Plotted By: IAN PIELZYNSKI

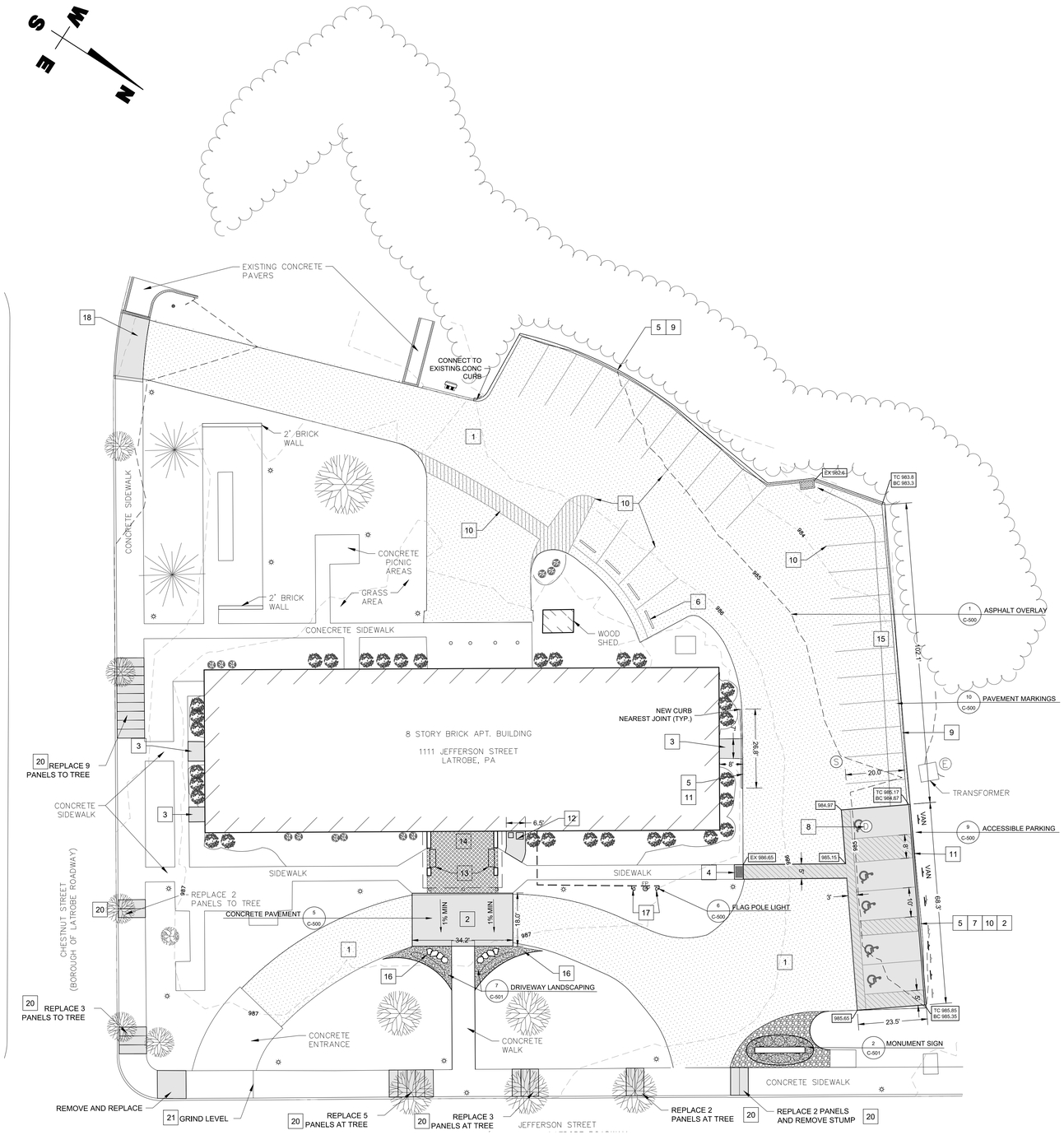

1 C-100 NEW SITE PLAN

SCALE: 1:20

0 20 40

SCALE IN FEET

BASE BID QUANTITIES

Concrete Pavement	312 sy
1-1/2" Asphalt Wearing Course Overlay	2414 sy

Note: These quantities are provided for the contractors reference. Contractors shall field verify all quantities prior to bid submission.

BASE BID ALLOWANCES

Paving Membrane (refer to asphalt overlay detail 1/C-500)	1400 sf

Note - Costs for these quantities are to be included in the Base Bid.
See Unit Costs specification section and Unit Costs on the Bid Form.

ALTERNATE BID ITEMS

The following are Alternate Bid Items that are not included in the Base Bid Amount. Provide costs for these items to be ADDED to the Base Bid Amount. Refer to the Alternates specification section and the Bid Form.

Alternate GC1 - Monument Sign - installation of monument sign and associated landscaping.

Alternate GC2 - Stamped Concrete Overlay - installation of a stamped concrete overlay on the existing concrete below the front canopy (+/- 500 sf).

Alternate GC 3 - Benches - installation of two new benches at the front canopy.

Alternate GC4 - Mailbox Concrete Pad - installation of new concrete pad and relocation of the existing mailboxes.

Alternate EC1 - Flag Pole Lighting - installation of flag pole lighting, conduits, and wiring.

SITE NOTES

1. Provide shop drawing indicating the proposed location of control joints, expansion joints, and construction joints in all concrete areas.
2. The indicated proposed spot elevations are for the contractors reference. The contractor shall ensure that all handicap accessible elements are constructed to meet the requirements of UFAS and ANSI 117. The contractor shall report all discrepancies to the owner and engineer. The contractor is expected to make all necessary adjustments to comply with the applicable code and meet existing field conditions.
3. Install handicap accessible parking signs centered on the parking space.
4. Curb Ramps - Particular attention shall be given to ensure storm water will not be trapped at the bottom of curb ramps and will drain into the storm sewer system.
5. Refer to the site details drawings for specific requirements for construction.
6. Perform base repairs as shown on the demolition plan prior to installation of new asphalt pavement or wearing course overlay.
7. Place Storm Inlet Sediment Protection at all inlets during construction.
8. Import fill, place and compact in lifts to subgrade elevation, place topsoil to finish grade.
9. Install new lawn in all disturbed areas not scheduled for pavements or other finish surfaces.
10. GC is responsible for the installation and maintenance of all erosion and sediment controls.
11. GC is responsible to adjust elevations of manholes, inlets, cleanouts, fire hydrants, valves, junction boxes, etc. to meet the proposed finish grades.

SITE KEY NOTES

1. 1.5" Asphalt overlay - clean, crack seal, and install 1.5" asphalt wearing course overlay. Refer to the Base Bid Allowances noted on the drawing, the Unit Cost specification, and Asphalt Overlay detail for quantity of paving membrane included in the project.
2. Concrete Pavement - Standard Duty - Dowel new concrete pad to existing concrete slab, refer to details. Set pad 1/4-inch lower than existing adjacent concrete and slope away from the building a minimum slope of 1%.
3. Concrete Sidewalk - Dowel new concrete pad/sidewalk to building, refer to details.
4. Concrete Pavement (Crosswalk) - heavy duty concrete, match existing sidewalk width, install crosswalk pavement markings, and detectable warning. Install expansion joint at connection to existing concrete.
5. Provide topsoil and backfill to the top of new curbs and sidewalks. Provide smooth transition to existing grade. (typ.)
6. New Wheel stops per specifications
7. Install handicap parking area with maximum 2% slope in any direction and accessible path from each parking space to the new crosswalk. Install bollard with accessible parking sign at each space. Refer to typical handicap parking detail.
8. Raise manhole rim to finish grade.
9. Asphalt wedge curb.
10. Painted Parking Space Markings (typ)
11. Concrete curb
12. Mailbox - install concrete sidewalk and relocate mailboxes onto this pad
13. Install new benches
14. Stamped Concrete Overlay - install on existing concrete below canopy (+/- 500 square feet)
15. Parking Area Drainage - refer to notes on the Site Demolition Plan to adjust grade in parking area to direct runoff to the existing inlet. Ensure finish grade asphalt slopes uniformly to the existing inlet.
16. Landscaping - install 6" minimum depth of topsoil, landscape separation fabric, landscape edging, plants, and stone mulch. Landscaping shall be installed to allow and facilitate storm water runoff from the concrete pad into the stone mulch.
17. Flag Pole Lighting - Electrical Contractor to install flag pole lighting on concrete base, extend circuit in PVC conduit from the fixture to the building exterior as shown. Extend conduit up the building's exterior and into the 1st floor ceiling, across the office area, corridor, and into the building's maintenance room above the drop ceiling, and connect to an existing load center.
18. Replace Concrete Entrance (curb, gutter, sidewalk, detectable warning) in accordance with the City of Latrobe requirements. Contractor to obtain a Street Opening Permit from the City of Latrobe. Protect existing adjacent decorative brick pavers.
19. Contractor shall obtain a Sign zoning permit for the installation of the new sign from the City of Latrobe.
20. Sidewalk replacement - remove and replace concrete sidewalks. Dowel new concrete to existing. refer to concrete joint details.
21. Grind sidewalk joint level with adjacent concrete.

RW SLEIGHTER
ENGINEERS & ARCHITECTS
1060 EBERLY WAY
LEMONT FURNACE, PA 15456
Phone 724.438.4010
Fax 724.438.4017
info@rwsleighter.com
WWW.RWSLEIGHTER.COM

CONFIDENTIAL - ALL RIGHTS RESERVED

SEAL

COMMONWEALTH OF PENNSYLVANIA
REGISTERED PROFESSIONAL
ROBERT W. SLEIGHTER
ENGINEER
NO. 045884-E

PROJECT
LOYALHANNA APARTMENT RENOVATIONS
1111 JEFFERSON STREET
LATROBE, PENNSYLVANIA 15650

OWNER
WESTMORELAND COUNTY HOUSING AUTHORITY
167 SOUTH GREENGATE ROAD
GREENSBURG, PENNSYLVANIA 15601

REVISION

NO.	DATE	DESCRIPTION

DATE	PROJECT NUMBER
FEBRUARY 22, 2019	R17-077-04

DESIGNED	DRAWN	CHECKED
DWC	RSW	RWS

SHEET NAME
NEW SITE PLAN

SHEET NUMBER
C-100

P:\077 - Westmoreland County Housing Authority\R17-077-04 - WCHA Loyalhanna\Dwg\Sheets\C-100 NEW SITE PLAN.dwg, Date: 2/22/2019 12:16:40 PM, Plotted By: IAN PIECZYNSKI

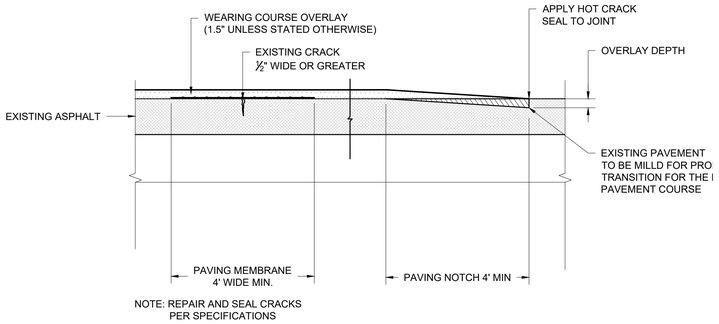

1 C-500 **ASPHALT OVERLAY**
SCALE: N.T.S.

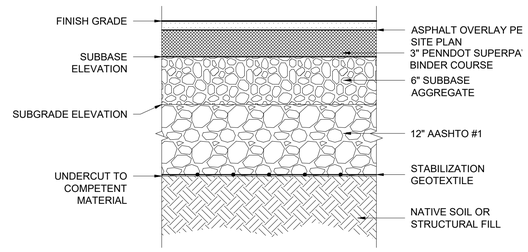

SECTION

2 C-500 **BASE REPAIR**
SCALE: N.T.S.

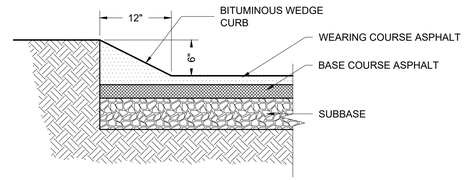

3 C-500 **ASPHALT WEDGE CURB**
SCALE: N.T.S.

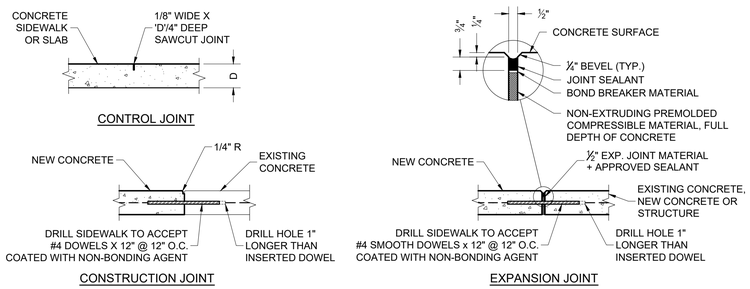

NOTE:
1. CONTROL JOINTS SHALL BE INSTALLED AS SHOWN ON DRAWINGS.
2. PLACE JOINTS SO AS TO UNIFORMLY DIVIDE SLABS INTO SQUARES OF THE SAME DIMENSION AND A LENGTH TO WIDTH RATIO OF NO MORE THAN 1:5.
3. CONTROL JOINTS MAY BE SAWN, PREMOLDED STRIP OR HAND FORMED UNLESS OTHERWISE NOTED.

4 C-500 **CONCRETE JOINTS**
SCALE: N.T.S.

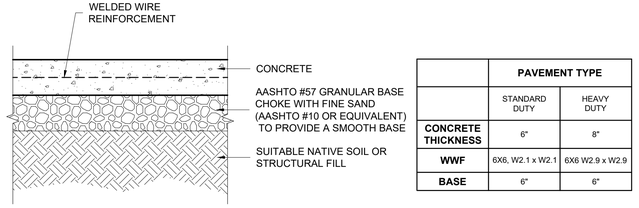

	PAVEMENT TYPE	
	STANDARD DUTY	HEAVY DUTY
CONCRETE THICKNESS	6"	8"
WWF	6X6, W2.1 x W2.1	6X6 W2.9 x W2.9
BASE	6"	6"

5 C-500 **CONCRETE PAVEMENT**
SCALE: N.T.S.

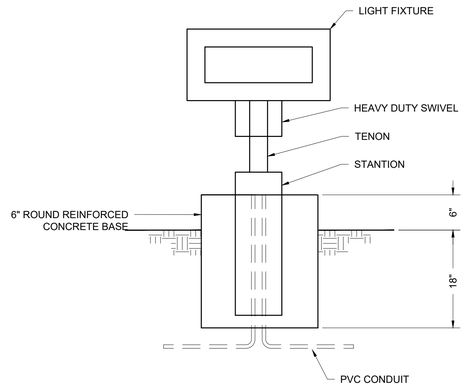

6 C-500 **FLAG POLE LIGHT**
SCALE: N.T.S.

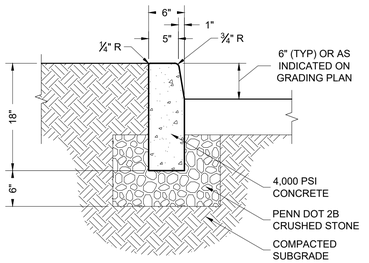

NOTE:
1. CONTRACTOR MAY SUBMIT REQUEST TO SLIP FORM CONCRETE CURBS IF ADEQUATE EXPERIENCE AND QUALITY WORKMANSHIP EVIDENCE ARE PROVIDED.

7 C-500 **CONCRETE CURB**
SCALE: N.T.S.

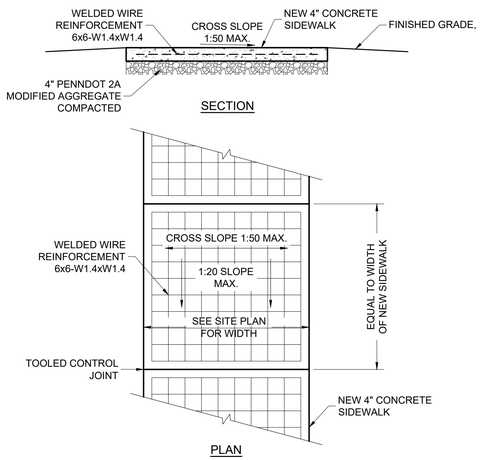

NOTE:
1. MAXIMUM SIDEWALK SLOPE IS 5%. MAX CROSS SLOPE IS 2%. NOTIFY ENGINEER OF ANY AND ALL DISCREPANCIES.
2. REFER TO CONCRETE JOINT DETAIL FOR APPLICABLE JOINTS.

8 C-500 **SIDEWALK**
SCALE: N.T.S.

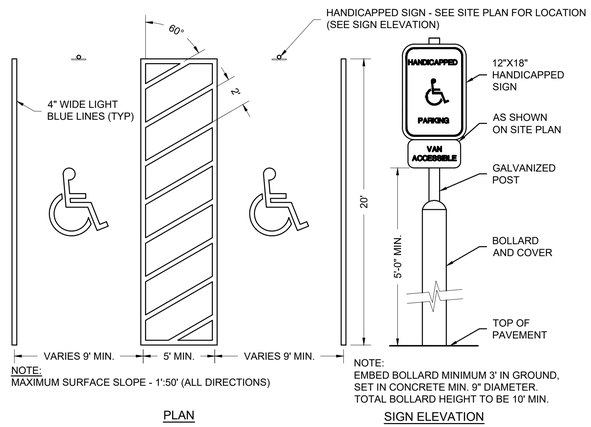

NOTE:
MAXIMUM SURFACE SLOPE - 1':50' (ALL DIRECTIONS)

PLAN

NOTE:
EMBED BOLLARD MINIMUM 3' IN GROUND, SET IN CONCRETE MIN. 9" DIAMETER. TOTAL BOLLARD HEIGHT TO BE 10' MIN.

SIGN ELEVATION

9 C-500 **ACCESSIBLE PARKING**
SCALE: N.T.S.

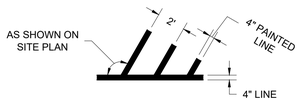

10 C-500 **PAVEMENT MARKINGS**
SCALE: N.T.S.

RW SLEIGHTER
ENGINEERS & ARCHITECTS
1060 EBERLY WAY
LEMONT FURNACE, PA 15456
Phone 724.438.4010
Fax 724.438.4017
info@rwsleighter.com
WWW.RWSLEIGHTER.COM

CONFIDENTIAL - ALL RIGHTS RESERVED

SEAL

COMMONWEALTH OF PENNSYLVANIA
REGISTERED PROFESSIONAL
ROBERT W. SLEIGHTER
ENGINEER
NO. 045884-E

PROJECT
LOYALHANNA APARTMENT RENOVATIONS
1111 JEFFERSON STREET
LATROBE, PENNSYLVANIA 15650

OWNER
WESTMORELAND COUNTY HOUSING AUTHORITY
167 SOUTH GREENGATE ROAD
GREENSBURG, PENNSYLVANIA 15601

REVISION

NO.	DATE	DESCRIPTION

DATE	PROJECT NUMBER
FEBRUARY 22, 2019	R17-077-04

DESIGNED	DRAWN	CHECKED
DWC	RSW	RWS

SHEET NAME
SITE DETAILS

SHEET NUMBER
C-500

P:\077 - Westmoreland County Housing Authority\R17-077-04 - WCHA Loyalhanna\Dwg\Sheets\C-500 SITE DETAILS.dwg, Date: 2/22/2019 12:41:02 PM, Plotted By: IAN PIECZYNSKI

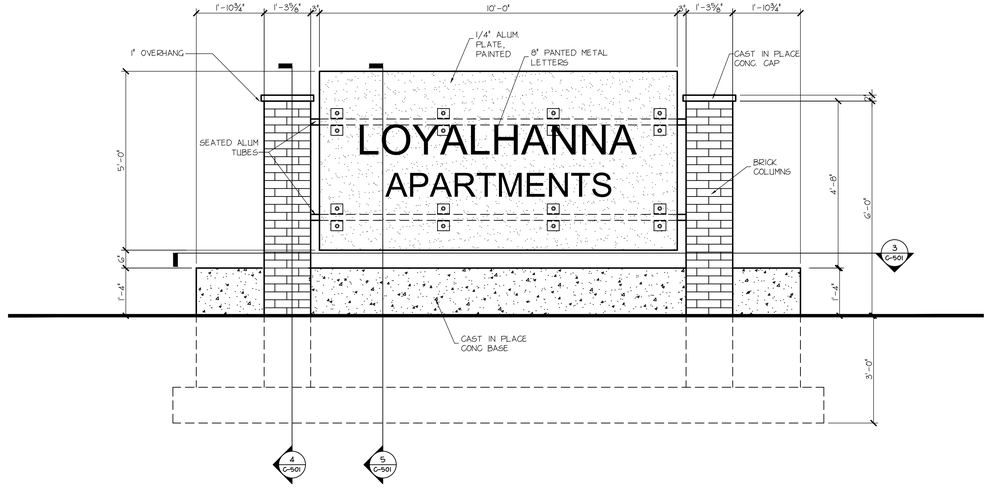

1 C-501 MONUMENT SIGN ELEVATION

SCALE: 1/2" = 1'-0"

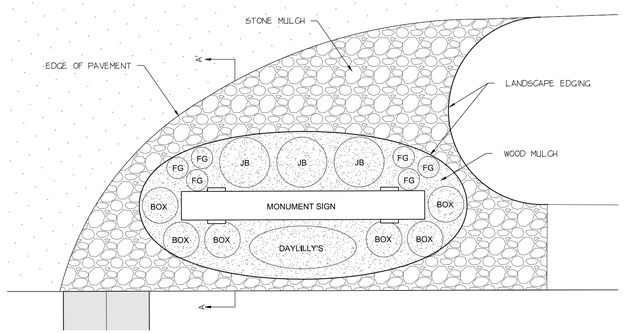

2 C-501 MONUMENT SIGN

SCALE: 1" = 5"

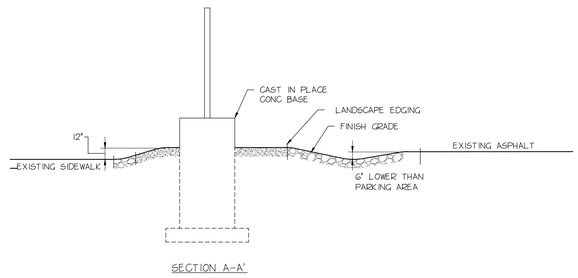

SECTION A-A'

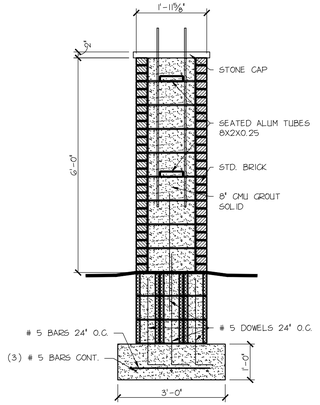

3 C-501 COLUMN SIGN SECTION

SCALE: 1/2" = 1'-0"

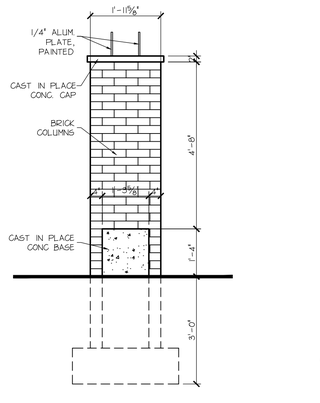

4 C-501 COLUMN ELEVATION

SCALE: 1/2" = 1'-0"

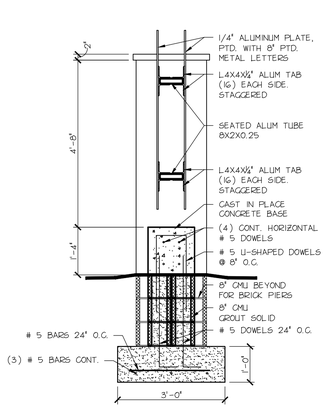

5 C-501 SIGN SECTION

SCALE: 1/2" = 1'-0"

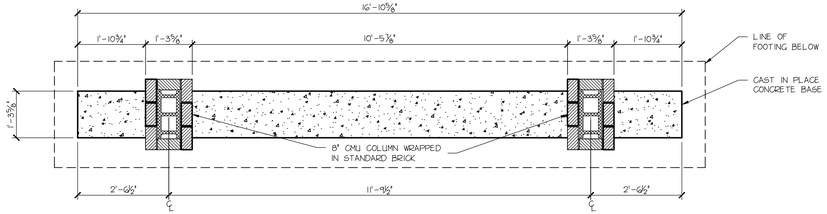

6 C-501 MONUMENT PLAN

SCALE: 1/2" = 1'-0"

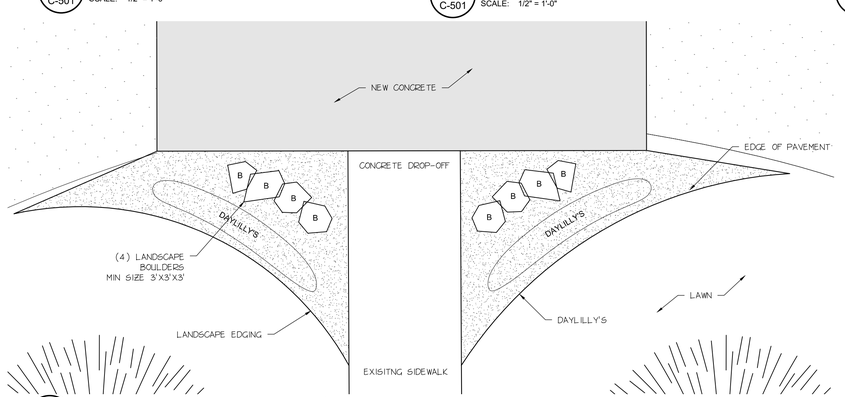

7 C-501 DRIVEWAY LANDSCAPING

SCALE: 1/2" = 1'-0"

LANDSCAPE NOTES

1. The general contractor is responsible for all work unless specifically noted otherwise.
2. The contract plan drawings and specifications provide a general description and layout of the landscaping to illustrate the intent of the project.
3. The landscaper shall prepare a shop drawing which will become the Final Landscape Plan. The plan shall include more detailed information regarding plant spacing, layout, location of accessories such as boulders, mulch, edging, etc.
4. The intent of the landscaping is to use plants, boulders, mulches, and accessories typical for the area. The Landscaper shall have the latitude to suggest alternate plants, mulches, and /or accessories to enhance the final landscape plan to meet this intent.
5. The quantity and quality of plants, mulch, boulders, etc. shall be provided to provide a completely landscaped and professionally prepared finished product for the owner.
6. The boulders shall vary in size, but are expected to be approximately 2 to 4 feet in size. They shall be arranged, stacked, and partially submerged into the ground creating a natural appearance.
7. All disturbed areas of the project shall be restored with a new lawn per the Seeding and Plants specification sections.

PLANT SCHEDULE

PLANT ID	PLANT NAME	COMMON NAME	QUANTITY	SIZE	SPACING
JB	Berberis thunbergii	Japanese Barberry	as shown	#3 container	as shown
FG	Pennisetum Alopecuroides	Dwarf Fountain Grass	as shown	#2 container	as shown
BOX	Buxus Sempervirens	English Boxwood	as shown	#3 container	as shown
DAYLILLY	Hemerocallis 'Stella de Oro'	Daylily	as shown	#1 container	as shown

RW SLEIGHTER
ENGINEERS & ARCHITECTS
1060 EBERLY WAY
LEMONT FURNACE, PA 15456
Phone 724.438.4010
Fax 724.438.4017
info@rwsleighter.com
WWW.RWSLEIGHTER.COM

CONFIDENTIAL - ALL RIGHTS RESERVED

SEAL

COMMONWEALTH OF PENNSYLVANIA
REGISTERED PROFESSIONAL
ROBERT W. SLEIGHTER
ENGINEER
NO. 045884-E

PROJECT
LOYALHANNA APARTMENT RENOVATIONS
1111 JEFFERSON STREET
LATROBE, PENNSYLVANIA 15650

OWNER
WESTMORELAND COUNTY HOUSING AUTHORITY
167 SOUTH GREENGATE ROAD
GREENSBURG, PENNSYLVANIA 15601

REVISION

NO.	DATE	DESCRIPTION

DATE: FEBRUARY 22, 2019
PROJECT NUMBER: R17-077-04
DESIGNED: DWC
DRAWN: RSW
CHECKED: RWS

SHEET NAME
MONUMENT SIGN

SHEET NUMBER
C-501

P:\077 - Westmoreland County Housing Authority\R17-077-04 - WCHA Loyalhanna\Dwg\Sheets\C-501 MONUMENT SIGN.dwg, Date: 2/22/2019 12:43:51 PM, Plotted By: IAN PIECZYNSKI

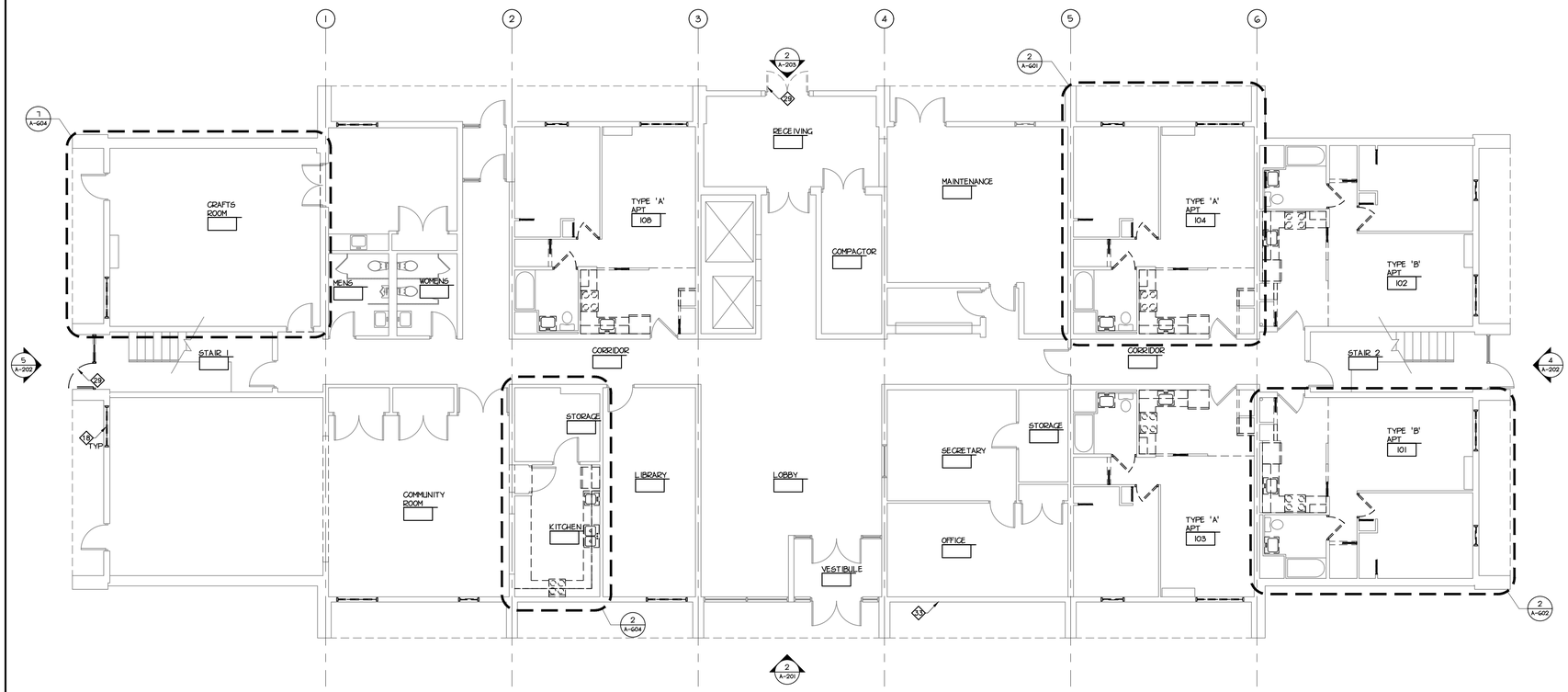

1 AD-101 FIRST FLOOR DEMOLITION PLAN

SCALE: 1/8" = 1'-0"

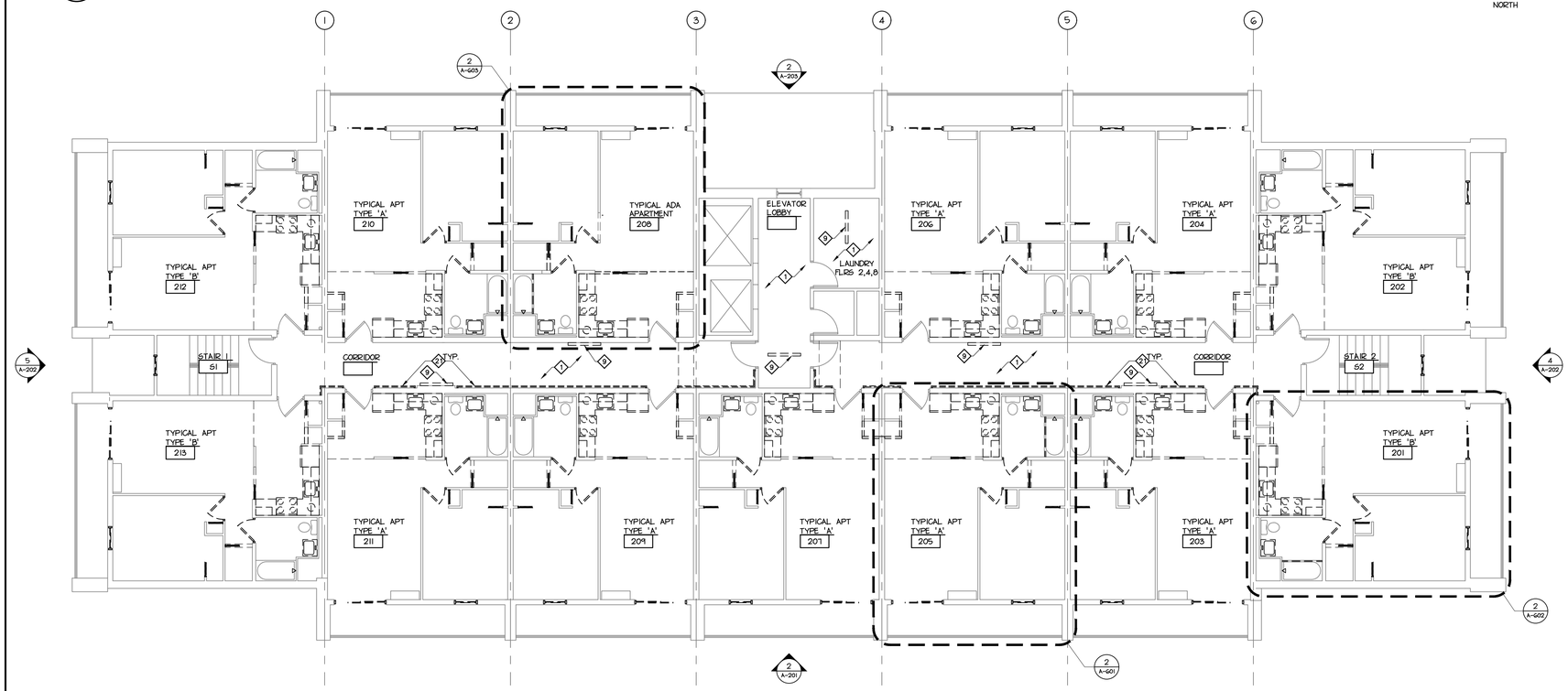

2 AD-101 TYPICAL FLOOR DEMOLITION PLAN

SCALE: 1/8" = 1'-0"

NUMBERED DEMOLITION NOTES

1. GC TO REMOVE FLOORING, INCLUDING BASE. REMOVE ALL GLUES AND RESIDUE. PREP SUBSTRATE FOR NEW FLOORING IN ACCORDANCE WITH FLOORING MANUFACTURER'S REQUIREMENTS.
2. GC TO REMOVE EXISTING WALL PARTITION ENTIRELY FROM FLOOR TO CEILING/BULKHEAD. LIMIT DISTURBANCE AND DAMAGE TO ADJACENT WALLS, FLOOR & CEILING. PATCH EXISTING WALLS, FLOOR AND CEILING.
3. GC TO REMOVE EXISTING DOORS, FRAMES AND RELATED HARDWARE. LIMIT DISTURBANCE AND DAMAGE TO ADJACENT WALLS, FLOOR AND CEILING. PATCH EXISTING WALLS FLOOR AND CEILING.
4. GC TO REMOVE KITCHEN CABINETS AND COUNTERTOPS INCLUDING PANTRY CABINETS (PANTRY CABINETS LOCATED IN FOUR EXISTING ADA UNITS ONLY). LIMIT DISTURBANCE AND DAMAGE TO ADJACENT WALLS, FLOOR & CEILING. PATCH EXISTING WALLS, FLOOR AND CEILING.
5. GC TO REMOVE SINK. PC TO DISCONNECT PLUMBING LINES AND TEMPORARILY CAP FOR NEW WORK. LIMIT DISTURBANCE AND DAMAGE TO ADJACENT WALLS, FLOOR & CEILING. GC TO PATCH EXISTING WALLS, FLOOR AND CEILING.
6. GC TO DISCONNECT AND REMOVE ALL REFRIGERATORS. REFRIGERATORS ARE TO BE TEMPORARILY STORED WITHIN APARTMENT UNIT OR TURNED OVER TO OWNER.
7. GC TO REMOVE EXISTING RANGE AND TURN-OVER TO OWNER.
8. EC TO DISCONNECT AND REMOVE RECEPTACLES AND LIGHT SWITCHES ALONG WITH COVER PLATE THROUGHOUT APARTMENT. PREPARE FOR NEW RECEPTACLES, SWITCHES & COVER PLATES
9. EC TO DISCONNECT AND REMOVE LIGHT FIXTURES. REWORK WIRING FOR NEW LIGHT FIXTURES AS INDICATED AS PART OF NEW WORK ON E-101. LIMIT DISTURBANCE AND DAMAGE TO ADJACENT WALLS, FLOOR & CEILING. GC TO PATCH EXISTING WALLS, FLOOR AND CEILING.
10. EC TO DISCONNECT & REMOVE VENT HOOD.
11. GC TO REMOVE EXISTING WALL MOUNTED MIRROR. LIMIT DISTURBANCE AND DAMAGE TO WALLS. PATCH WALLS TO MATCH EXISTING CONDITIONS AS PART OF NEW WORK.
12. GC TO REMOVE SHELVES, RODS AND RELATED HARDWARE FROM CLOSETS AS INDICATED. LIMIT DISTURBANCE AND DAMAGE TO WALLS. PATCH EXISTING WALLS TO MATCH EXISTING FINISH.
13. EC TO DISCONNECT (BACK TO PANEL) AND REMOVE LIGHT SWITCH.
14. GC TO REMOVE EXISTING CEILING TILE, GRID AND RELATED HANGERS. LIMIT DISTURBANCE AND DAMAGE TO WALLS. (FIRST FLOOR ONLY)
15. EXISTING TOILET TO BE REUSED, PC TO REMOVE ALL CAULKING FROM BASE AND CLEAN PRIOR TO REINSTALLATION
16. REMOVE EXISTING ACCORDION DOORS & PREPARE FOR NEW WORK
17. REMOVE EXISTING SLIDING GLASS DOORS, FRAMES AND ALL RELATED HARDWARE. (FLRS 2-8) LIMIT DISTURBANCE AND DAMAGE TO ADJACENT WALLS, FLOOR AND CEILING. PATCH EXISTING WALLS, FLOOR AND CEILING.
18. REMOVE EXISTING WINDOW, FRAME AND RELATED HARDWARE. LIMIT DISTURBANCE AND DAMAGE TO ADJACENT WALLS, FLOOR AND CEILING. PATCH EXISTING WALLS, FLOOR AND CEILING. REMOVE ALL EXISTING WINDOWS.
19. REMOVE 1X4 BOARDS LOCATED ON THE UNDERSIDE OF BALCONIES IF PRESENT. PATCH REMAINING HOLES.
20. REMOVE CEILING MOUNTED MONITORING DEVICE LOCATED IN APARTMENTS. PATCH AND REPAIR CEILING TO MATCH EXISTING ADJACENT MATERIALS AND FINISHES
21. REMOVE EXISTING ALUMINUM HANDRAIL ON FLOORS 2 THRU 8, MODIFY, POWDER COAT AND REINSTALL OVER CONTINUOUS TRIM BOARD AS SHOWN ON DETAIL 13/A-101 & 14/A-101.
22. PC TO REMOVE EXISTING HOT WATER HEATER IN APARTMENTS & PREPARE FOR NEW DOMESTIC HOT WATER SYSTEM.
23. PC TO REMOVE EXISTING SHOWER HEADS AND PREPARE FOR NEW SHOWER HEAD.
24. GC TO REMOVE EXISTING DOOR & RELATED HARDWARE. LEAVE EXISTING TIMELY DOOR FRAME TO BE CLEANED AND PAINTED
25. EC TO DISCONNECT AND REMOVE LIGHT SWITCH TO BE RELOCATED
26. EC TO DISCONNECT AND REMOVE RECEPTACLE TO BE RELOCATED
27. EC TO CAREFULLY REMOVE LIGHT FIXTURE TO REUSE WITH NEW CEILING TILE AND GRID .
28. GC TO REMOVE EXISTING CAULKING FROM ALL JOINTS AT EIFS WITHOUT DAMAGING MESH. IF MESH IS DAMAGED MUST REPAIR AT OWN EXPENSE. CLEAN & PREPARE FOR NEW WORK.
29. GC TO REMOVE EXISTING DOOR, FRAME & RELATED HARDWARE
30. GC TO REMOVE EXISTING PANIC HARDWARE FROM ALUMINUM STOREFRONT DOOR & PREPARE FOR NEW WORK.
31. GC TO REMOVE PORTION OF EXISTING PARTITION WALL TO ALLOW FOR INSTALLATION OF DOOR & FRAME. REFER TO FLOOR PLAN FOR DOOR LOCATION & SIZE.
32. GC TO REMOVE EIFS PANEL TO NEAREST EXPANSION JOINT. CLEAN & PREPARE FOR NEW EIFS.
33. GC TO REMOVE EXISTING LETTERING FROM EXTERIOR BUILDING WALL. PROVIDE SEAMLESS PATCH, REPAIR & SEAL OF EXISTING CONDITIONS. MATCH EXISTING ADJACENT MATERIALS.
34. MC TO REMOVE EXISTING EXHAUST GRILL. LIMIT DISTURBANCE AND DAMAGE TO CEILING. PATCH OPENING TO MATCH EXISTING ADJACENT CONDITIONS.
35. GC TO REMOVE EXISTING SHOWER ROD AND PREPARE FOR NEW WORK.

GENERAL DEMOLITION NOTES

1. ALL DEMOLITION DEBRIS, WASTE MATERIAL, EXCESS FILL, TREES, LIMBS, ROOTS, RUBBISH, AND TRASH IS TO BE CONTAINERIZED ON SITE AS GENERATED.
2. THE GENERAL CONTRACTOR SHALL PROVIDE AND MAINTAIN ROLL-OFF BOX(ES) AND/OR DUMPSTER(S).
3. THE GENERAL CONTRACTOR SHALL IMMEDIATELY REMOVE FROM THE SITE, TRANSPORT AND DISPOSE AT AN APPROVED OFF SITE DISPOSAL FACILITY, ALL ROLL-OFF BOX(ES) AND/OR DUMPSTER(S) WHEN FULL. THIS MAY INCLUDE BUT NOT BE LIMITED TO BUILDING DEMOLITION DEBRIS.
4. THE OWNER SHALL BE GIVEN THE OPPORTUNITY TO COLLECT AND RETAIN AT THEIR FACILITY ANY ITEMS TO BE REMOVED ON THIS PROJECT. THIS MAY INCLUDE BUT NOT BE LIMITED TO DOORS, PLUMBING FIXTURES, LIGHT FIXTURES, ETC. CONTRACTOR(S) SHALL COORDINATE DEMOLITION WORK WITH, AND NOTIFY THE OWNER, PRIOR TO REMOVAL OF ITEMS FROM SITE.
5. EXAMINE EXISTING CONDITIONS PRIOR TO COMMENCEMENT OF WORK, INCLUDING, BUT NOT LIMITED TO, ELEMENTS SUBJECT TO DAMAGE OR MOVEMENT DURING CUTTING AND PATCHING.
6. FURNISH PROTECTION FROM ELEMENTS FOR AREAS WHICH MAY BE EXPOSED BY UNCOVERING WORK.
7. PRIME CONTRACTORS ARE RESPONSIBLE FOR CUTTING & PATCHING ANY AREAS OF EXISTING WALLS, FLOORS OR CEILINGS THAT IS REQUIRED FOR THEIR WORK. PRIME CONTRACTORS ARE ALSO RESPONSIBLE FOR REPAIRING PORTIONS OF EXISTING SURFACES WHICH ARE DAMAGED DURING THEIR DEMOLITION WORK.
8. PROVIDE TEMPORARY SUPPORT TO ENSURE STRUCTURAL INTEGRITY OF THE WORK. PROVIDE DEVICES AND METHODS TO PROTECT OTHER PORTIONS OF PROJECT FROM DAMAGE. PROVIDE TEMPORARY, SAFE FLOORING IN AREAS OF WORK.
9. GENERAL CONTRACTOR IS RESPONSIBLE FOR ALL DEMOLITION UNLESS SPECIFICALLY INDICATED TO BE COMPLETED BY HVAC, PLUMBING OR ELECTRICAL CONTRACTORS. HVAC, PLUMBING AND ELECTRICAL CONTRACTORS ARE RESPONSIBLE FOR DEMOLITION OF ALL WORK WITHIN THEIR DISCIPLINE.
10. REFER TO ENLARGED DEMOLITION PLANS FOR SPECIFIC DEMOLITION IN THE APARTMENTS.
11. REFER TO DEMOLITION ELEVATION PLANS FOR SPECIFIC DEMOLITION ON THE EXTERIOR OF THE BUILDING

RW SLEIGHTER
ENGINEERS & ARCHITECTS
1060 EBERLY WAY
LEMONT FURNACE, PA 15456
Phone 724.438.4010
Fax 724.438.4017
info@rwsleighter.com
WWW.RWSLEIGHTER.COM

CONFIDENTIAL - ALL RIGHTS RESERVED

SEAL

REGISTERED ARCHITECT COMMONWEALTH OF PENNSYLVANIA SCHROCK-RAMSEY

PROJECT
LOYALHANNA APARTMENT RENOVATIONS
1111 JEFFERSON STREET
LATROBE, PENNSYLVANIA 15650

OWNER
WESTMORELAND COUNTY HOUSING AUTHORITY
167 SOUTH GREENGATE ROAD
GREENSBURG, PENNSYLVANIA 15601

REVISION		
NO.	DATE	DESCRIPTION

DATE	PROJECT NUMBER
MAY 6, 2019	R17-077-04

DESIGNED	DRAWN	CHECKED
----	----	----

SHEET NAME
DEMOLITION FLOOR PLANS

SHEET NUMBER
AD-101

P:\077 - Westmoreland County Housing Authority\R17-077-04 - WCHA Loyalhanna\Dwg\Sheets\AD-101.dwg, Date: 5/8/2019 3:49:30 PM, Plotted By: SEAN KEFFER

APARTMENT QUANTITY MATRIX

FLOOR	NO. OF TYPE 'A' APARTMENTS	NO. OF TYPE 'B' APARTMENTS	NO. OF UFAS APARTMENTS	TOTAL APARTMENTS
1	3	2	0	5
2	8	4	1	13
3	8	4	1	13
4	8	4	1	13
5	8	4	1	13
6	8	4	1	13
7	8	4	1	13
8	8	4	1	13
TOTALS	59	30	7	96

APARTMENT TYPE MATRIX

FLOOR	APARTMENT NO.	APARTMENT TYPE	REMARKS
1	104	TYPE 'A'	SEE NOTES 1
1	103	TYPE 'A'	SEE NOTES 1, 4
1	101	TYPE 'B'	SEE NOTE 2
1	102	TYPE 'B'	SEE NOTE 2, 4
1	108	TYPE 'A'	SEE NOTES 1
2-8	T04, T05, T11	TYPE 'A'	SEE NOTE 1, 5
2-8	T03, T06, T01, T09, T10	TYPE 'A'	SEE NOTE 1, 4, 5
2-8	T01, T12	TYPE 'B'	SEE NOTES 2, 5
2-8	T02, T13	TYPE 'B'	SEE NOTES 2, 4, 5
2-8	T08	UFAS	SEE NOTE 3, 5

NOTES:
1. REFER TO SHEET A-601 FOR ENLARGED TYPE 'A' APARTMENT PLANS, INTERIOR ELEVATIONS, ROOM FINISH SCHEDULE AND DOOR SCHEDULE.
2. REFER TO SHEET A-602 FOR ENLARGED TYPE 'B' APARTMENT PLANS, INTERIOR ELEVATIONS, ROOM FINISH SCHEDULE AND DOOR SCHEDULE.
3. REFER TO SHEET A-603 FOR ENLARGED ACCESSIBLE APARTMENT PLANS, INTERIOR ELEVATIONS, ROOM FINISH SCHEDULE AND DOOR SCHEDULE.
4. APARTMENT NUMBERS INDICATED IS MIRROR IMAGE TO ENLARGED PLAN SHOWN. LAYOUT TO BE ADJUSTED ACCORDINGLY.
5. ROOM NUMBERS INDICATED WITH '1' ARE FOR TYPICAL FLOORS 2 THROUGH 8, WHERE '1' = RELATED FLOOR NUMBER.

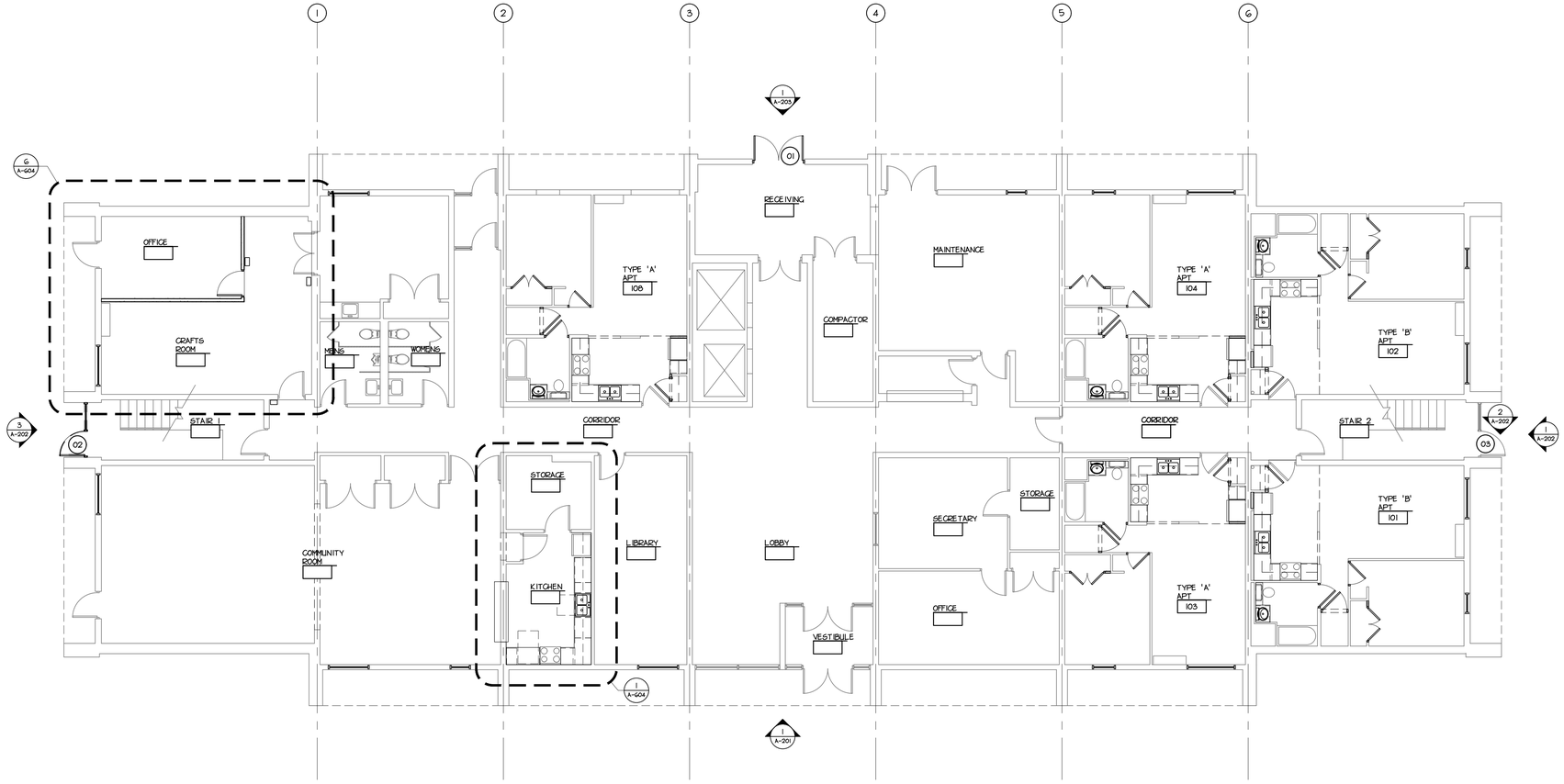

1 / A-101 FIRST FLOOR PLAN
SCALE: 1/8" = 1'-0"

NORTH

DOOR SCHEDULE

DOOR NUMBER	LABEL	SIZE WIDTH X HT.	DOOR TYPE	DOOR MATERIAL	FRAME TYPE	FRAME MATERIAL	SILL DETAILS	JAMB DETAILS	HEAD DETAILS	HW SET NUMBER	GENERAL REMARKS
											MATERIALS: A. ALUMINUM, M. HOLLOW METAL, W. WOOD, J. EXISTING TO REMAIN. LABEL: A 3-HR, B 1.5-HR, C 1 HR, D 20 MIN., E 2-HR
01		PR 3'-0" X 6'-8"	C	M	1	M	S1	J1	H1	07	NEW (2) 5X3-1/2X5/16 STEEL LINTEL
02		3'-0" X 7'-0"	B	A	2	A	–	–	–	06	----
03		EXISTING TO REMAIN	–	–	J	–	–	–	–	08	NEW PANIC HARDWARE ONLY

REMARKS:
1.

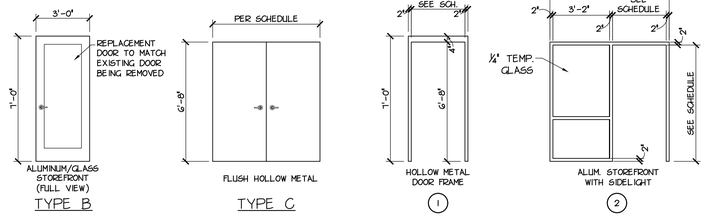

2 / A-101 DOOR & FRAME TYPES
SCALE: 1/4" = 1'-0"

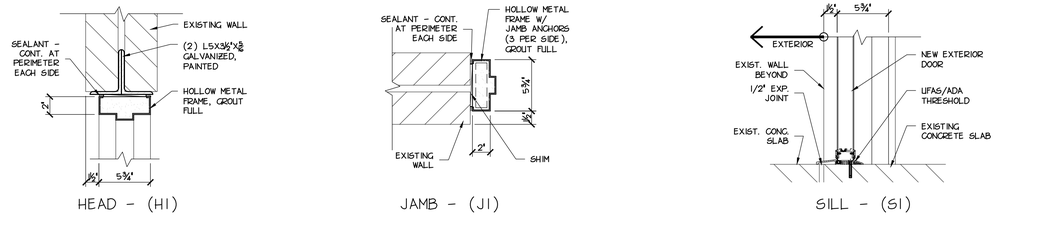

DOOR DETAILS
SCALE: 1 1/2" = 1'-0"

RW SLEIGHTER
ENGINEERS & ARCHITECTS
1060 EBERLY WAY
LEMONT FURNACE, PA 15456
Phone 724.438.4010
Fax 724.438.4017
info@rwsleighter.com
WWW.RWSLEIGHTER.COM

CONFIDENTIAL - ALL RIGHTS RESERVED

SEAL

REGISTERED ARCHITECT COMMONWEALTH OF PENNSYLVANIA SCHROCK RAYMOND

PROJECT
LOYALHANNA APARTMENT RENOVATIONS
1111 JEFFERSON STREET
LATROBE, PENNSYLVANIA 15650

OWNER
WESTMORELAND COUNTY HOUSING AUTHORITY
167 SOUTH GREENGATE ROAD
GREENSBURG, PENNSYLVANIA 15601

REVISION

NO.	DATE	DESCRIPTION

DATE: MAY 6, 2019
PROJECT NUMBER: R17-077-04
DESIGNED: ----
DRAWN: ----
CHECKED: ----

SHEET NAME
FIRST FLOOR PLAN

SHEET NUMBER
A-101

P:\077 - Westmoreland County Housing Authority\R17-077-04 - WCHA Loyalhanna\Dwg\Sheets\A-101.dwg, Date: 5/8/2019 3:49:48 PM, Plotted By: SEAN KEFFER

APARTMENT QUANTITY MATRIX

FLOOR	NO. OF TYPE 'A' APARTMENTS	NO. OF TYPE 'B' APARTMENTS	NO. OF UFAS APARTMENTS	TOTAL APARTMENTS
1	3	2	0	5
2	8	4	1	13
3	8	4	1	13
4	8	4	1	13
5	8	4	1	13
6	8	4	1	13
7	8	4	1	13
8	8	4	1	13
TOTALS	59	30	7	96

APARTMENT TYPE MATRIX

FLOOR	APARTMENT NO.	APARTMENT TYPE	REMARKS
1	104	TYPE 'A'	SEE NOTES 1
1	103	TYPE 'A'	SEE NOTES 1, 4
1	101	TYPE 'B'	SEE NOTE 2
1	102	TYPE 'B'	SEE NOTE 2, 4
1	108	TYPE 'A'	SEE NOTES 1
2-8	T04, T05, T11	TYPE 'A'	SEE NOTE 1, 5
2-8	T03, T06, T07, T09, T10	TYPE 'A'	SEE NOTE 1, 4, 5
2-8	T01, T12	TYPE 'B'	SEE NOTES 2, 5
2-8	T02, T13	TYPE 'B'	SEE NOTES 2, 4, 5
2-8	T08	UFAS	SEE NOTE 3, 5

NOTES:
1. REFER TO SHEET A-601 FOR ENLARGED TYPE 'A' APARTMENT PLANS, INTERIOR ELEVATIONS, ROOM FINISH SCHEDULE AND DOOR SCHEDULE.
2. REFER TO SHEET A-602 FOR ENLARGED TYPE 'B' APARTMENT PLANS, INTERIOR ELEVATIONS, ROOM FINISH SCHEDULE AND DOOR SCHEDULE.
3. REFER TO SHEET A-603 FOR ENLARGED ACCESSIBLE APARTMENT PLANS, INTERIOR ELEVATIONS, ROOM FINISH SCHEDULE AND DOOR SCHEDULE.
4. APARTMENT NUMBERS INDICATED IS MIRROR IMAGE TO ENLARGED PLAN SHOWN. LAYOUT TO BE ADJUSTED ACCORDINGLY.
5. ROOM NUMBERS INDICATED WITH 'T' ARE FOR TYPICAL FLOORS 2 THROUGH 8, WHERE 'T' = RELATED FLOOR NUMBER.

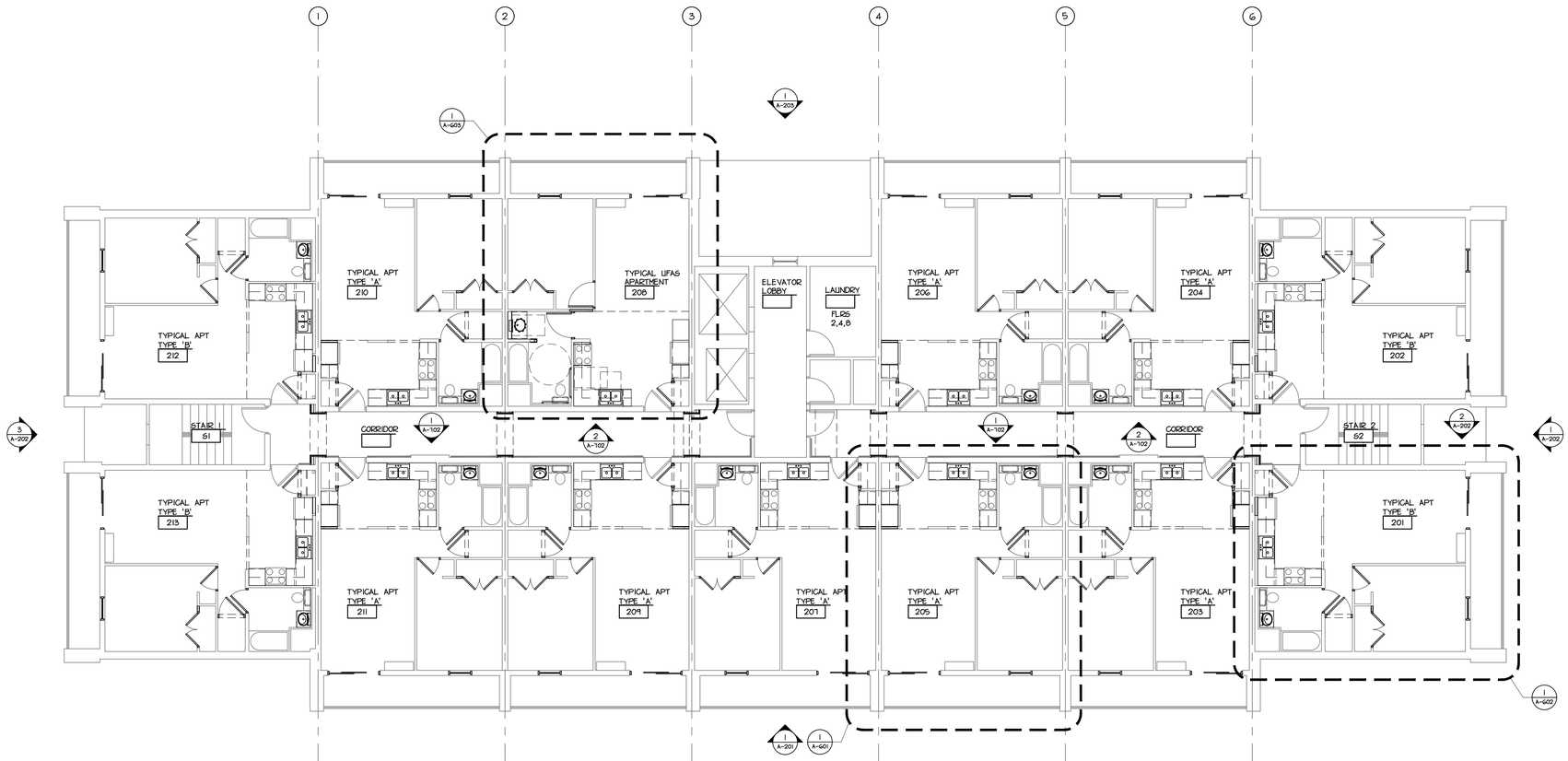

1 / A-102 TYPICAL FLOOR PLAN (2-8)
SCALE: 1/8" = 1'-0"

NORTH

GENERAL EXTERIOR & BALCONY REPAIR AND PROTECTION NOTES

1. FOR ALL SPALL CONCRETE REPAIRS OVERHEAD ON THE BALCONIES, CHIP OUT ALL WEAK AND DELAMINATED CONCRETE AND SAW-CUT THE PERIMETER ½" IN SHARP ANGLE CUTS AND PATCH FLUSH WITH SIKAQUICK VOH PATCHING MORTAR. TO REPAIR ALL SPALLED AREAS ON THE EDGES OF THE BALCONIES PLACE A FORM AND FILL WITH SIKAQUICK 1000. IF THERE ARE ANY GAPS AROUND THE RAILING POSTS PLACE A ½"X ½" BEAD OF SIKAFLEX 15LM SEALANT.
2. FOR THE BALCONY SURFACES THAT HAVE EXISTING COATINGS ON THEM THE CONTRACTOR SHALL PREPARE THE SUBSTRATE PROPERLY A PER THE TECHNICAL DATA SHEETS OF THE SIKALASTIC 710 / 735 SYSTEM, ALONG WITH THE RECOAT PRIMER. FOR THE CEILING SURFACES OF THE BALCONIES THAT HAVE EXISTING COATINGS ON THEN PREPARE THE SUBSTRATE AS PER THE TECHNICAL DATA SHEET FOR THE SIKAGARD 670W ACRYLIC COATING AND APPLY IN A TWO-COAT APPLICATION.
3. FOR ALL CAULKING - JOINT SEALANTS ON THE EIFIS EXTERIOR THE CONTRACTOR SHALL REMOVE THE EXISTING SEALANT COMPLETELY AND REPLACE WITH THE SIKA HYFLEX 150LM SEALANT. **THE CONTRACTOR SHALL TAKE CARE NOT TO CUT THE EIFIS MESH WITHIN THE EXPANSION JOINT AREAS WHILE REMOVING THE EXISTING SEALANTS, IF THE MESH IS DAMAGED THE CONTRACTOR SHALL BE RESPONSIBLE AT HIS OWN COST TO REPAIR THE EIFIS COMPLETELY.**

TYPICAL FLOOR CORRIDOR & ELEVATOR LOBBY
ROOM FINISH SCHEDULE

MATERIAL
B. VINYL COMPOSITION TILE
C. CARPET TILE
D. RUBBER
G. DRYWALL
H. ACOUSTIC TILE
J. EXISTING TO REMAIN
L. LUXURY VINYL TILE

FINISHES
1. PRE-FINISHED
2. PAINTED

REMARKS
1. MATCH EXISTING CEILING HEIGHT
2. LAUNDRY OCCURS AT FLOOR 2,4,8
3. CLEAN & PAINT EXISTING DOOR & FRAME (BOTH SIDES) OF ALL DOORS LOCATED IN CORRIDORS
4. CLEAN & PAINT EXISTING DOOR & FRAME (BOTH SIDES) OF ALL DOORS (INCLUDING ELEVATOR FRAME & DOOR) LOCATED IN ELEVATOR LOBBY

ROOM NUMBER	ROOM NAME	FLOOR MATERIAL	FLOOR FINISH	FLOOR COLOR	BASE MATERIAL	BASE FINISH	BASE COLOR	WALLS NORTH MATERIAL	WALLS NORTH FINISH	WALLS NORTH COLOR	WALLS SOUTH MATERIAL	WALLS SOUTH FINISH	WALLS SOUTH COLOR	WALLS EAST MATERIAL	WALLS EAST FINISH	WALLS EAST COLOR	WALLS WEST MATERIAL	WALLS WEST FINISH	WALLS WEST COLOR	WALLS WNSCT MATERIAL	WALLS WNSCT FINISH	WALLS WNSCT COLOR	CEILING MATERIAL	CEILING FINISH	CEILING COLOR	CEILING HEIGHT	REMARKS
	ELEVATOR LOBBY	L	1	-	D	1	-	J	2	-	J	2	-	J	2	-	J	2	-	J	2	-	-	J	2	EX	1,4
	CORRIDOR	C	1	-	D	1	-	J	2	-	J	2	-	J	2	-	J	2	-	J	2	-	-	J	2	EX	1,3
	LAUNDRY	L	1	-	D	1	-	J	2	-	J	2	-	J	2	-	J	2	-	J	2	-	-	J	2	EX	2

RW SLEIGHTER
ENGINEERS & ARCHITECTS
1060 EBERLY WAY
LEMONT FURNACE, PA 15456
Phone 724.438.4010
Fax 724.438.4017
info@rwsleighter.com
WWW.RWSLEIGHTER.COM

CONFIDENTIAL - ALL RIGHTS RESERVED

SEAL

PROJECT
LOYALHANNA APARTMENT RENOVATIONS
1111 JEFFERSON STREET
LATROBE, PENNSYLVANIA 15650

OWNER
WESTMORELAND COUNTY HOUSING AUTHORITY
167 SOUTH GREENGATE ROAD
GREENSBURG, PENNSYLVANIA 15601

REVISION		
NO.	DATE	DESCRIPTION

DATE	PROJECT NUMBER
MAY 6, 2019	R17-077-04
DESIGNED	DRAWN / CHECKED
----	---- / ----

SHEET NAME
TYPICAL FLOOR PLAN

SHEET NUMBER
A-102

P:\077 - Westmoreland County Housing Authority\R17-077-04 - WCHA Loyalhanna\Dwg\Sheets\A-102.dwg, Date: 5/8/2019 3:56:03 PM, Plotted By: SEAN KEIFFER

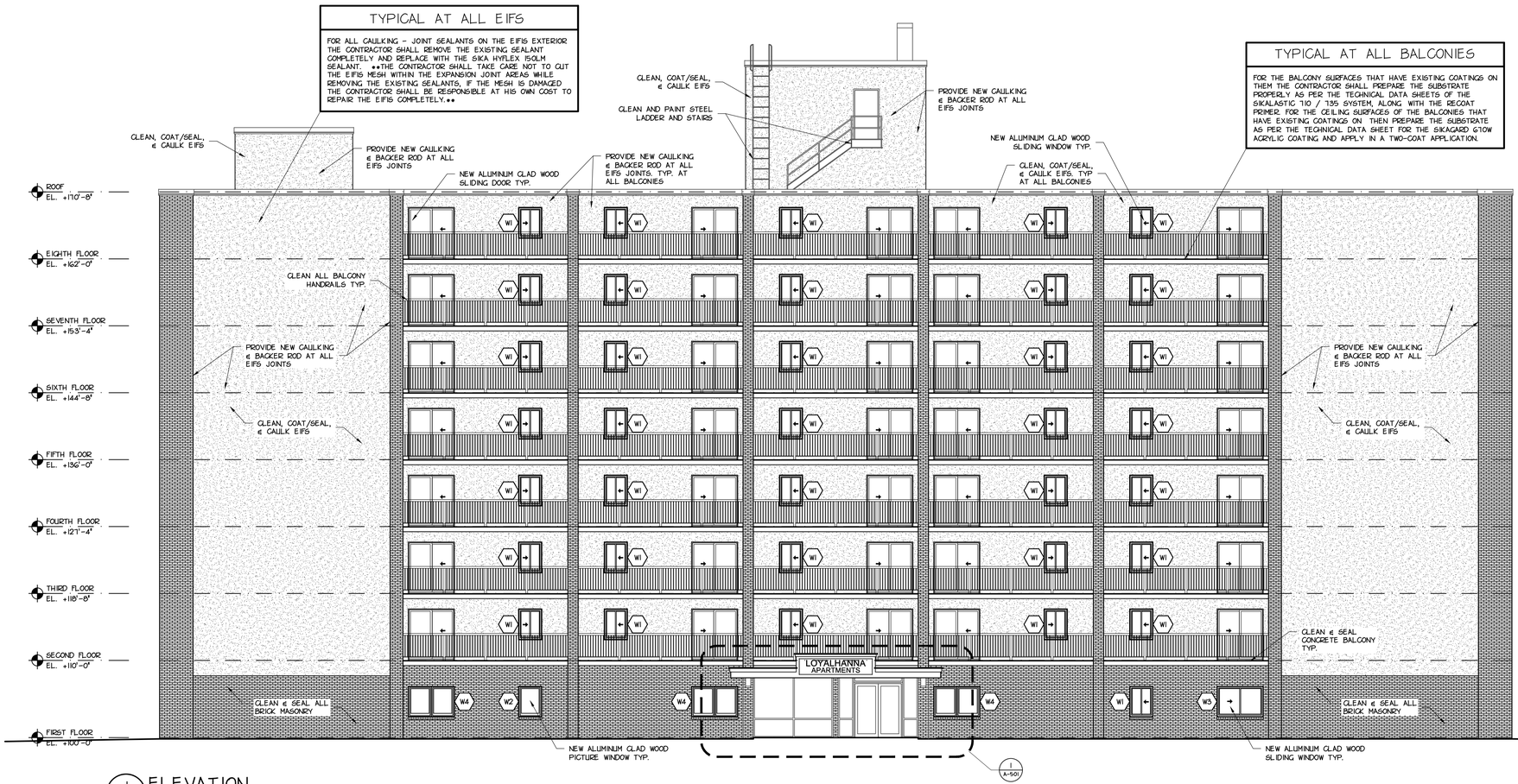

1 A-201 ELEVATION
SCALE: 1/8" = 1'-0"

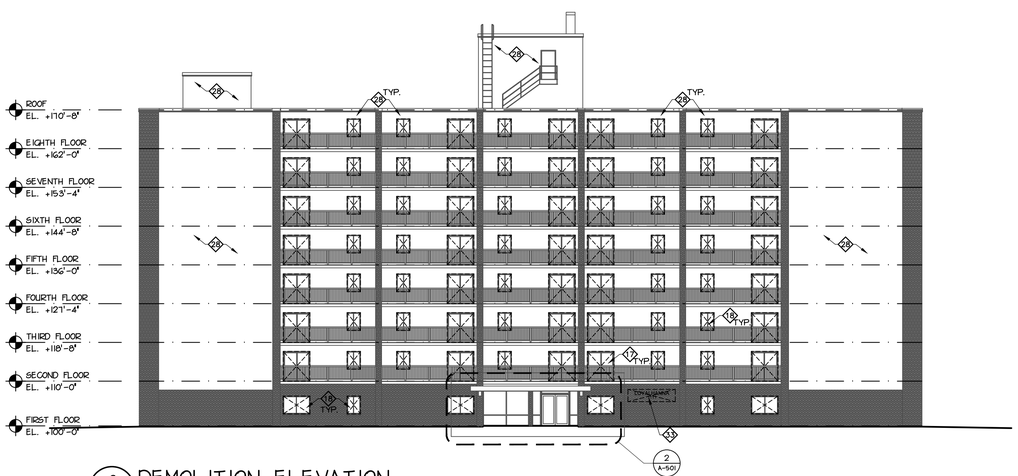

2 A-201 DEMOLITION ELEVATION
SCALE: 1/16" = 1'-0"

GENERAL EXTERIOR & BALCONY REPAIR AND PROTECTION NOTES

1. FOR ALL SPALL CONCRETE REPAIRS OVERHEAD ON THE BALCONIES, CHIP OUT ALL WEAK AND DELAMINATED CONCRETE AND SAW-CUT THE PERIMETER ½" IN SHARP ANGLE CUTS AND PATCH FLUSH WITH SIKAQUICK VOH PATCHING MORTAR. TO REPAIR ALL SPALLED AREAS ON THE EDGES OF THE BALCONIES PLACE A FORM AND FILL WITH SIKAQUICK 1000. IF THERE ARE ANY GAPS AROUND THE RAILING POSTS PLACE A ½"X ½" BEAD OF SIKAFLEX 15LM SEALANT.
2. FOR THE BALCONY SURFACES THAT HAVE EXISTING COATINGS ON THEM THE CONTRACTOR SHALL PREPARE THE SUBSTRATE PROPERLY A PER THE TECHNICAL DATA SHEETS OF THE SIKALASTIC 710 / 735 SYSTEM, ALONG WITH THE RECOAT PRIMER. FOR THE CEILING SURFACES OF THE BALCONIES THAT HAVE EXISTING COATINGS ON THEN PREPARE THE SUBSTRATE AS PER THE TECHNICAL DATA SHEET FOR THE SIKAGARD G10W ACRYLIC COATING AND APPLY IN A TWO-COAT APPLICATION.
3. FOR ALL CAULKING - JOINT SEALANTS ON THE EIFIS EXTERIOR THE CONTRACTOR SHALL REMOVE THE EXISTING SEALANT COMPLETELY AND REPLACE WITH THE SIKA HYFLEX 150LM SEALANT. **THE CONTRACTOR SHALL TAKE CARE NOT TO CUT THE EIFIS MESH WITHIN THE EXPANSION JOINT AREAS WHILE REMOVING THE EXISTING SEALANTS, IF THE MESH IS DAMAGED THE CONTRACTOR SHALL BE RESPONSIBLE AT HIS OWN COST TO REPAIR THE EIFIS COMPLETELY.**

EIFS RESTORATION

CLEANING:
- -WET EIFS EXTERIOR USING A LOW PRESSURE SPRAYER AND WATER
- -APPLY A CLEANING SOLUTION DESIGNED TO REMOVE EIFS STAINING AND MILDEW AT A PRESSURE OF 30-50 PSI. CAUTION SHALL BE TAKEN TO NOT USE A HIGH-PRESSURE SPRAYER THAT MAY DAMAGE THE EXTERIOR FINISH OF THE EIFS
- -RINSE EIFS WALL USING HIGHER PRESSURE WATER (4500 PSI) TO REMOVE THE CLEANING SOLUTION AND EMBEDDED MILDEW AND SURFACE CONTAMINANTS

EIFS COATING AND AESTHETIC IMPROVEMENT:
- -FOLLOWING CLEANING PROCEDURES FOR ENTIRE SURFACE OF EIFS. REPAIR ANY AREAS OF DAMAGE
- -SPRAY APPLY TWO COATS OF AN EMULSIFIED ACRYLIC COATING TO THE SURFACE OF THE EIFS AT THE COAT MANUFACTURERS RECOMMENDED APPLICATION RATE

DRAWING NOTES

1. REFER TO SHEET AD-101 FOR GENERAL DEMOLITION & NUMBERED DEMOLITION NOTES

RW SLEIGHTER
ENGINEERS & ARCHITECTS
1060 EBERLY WAY
LEMONT FURNACE, PA 15456
Phone 724.438.4010
Fax 724.438.4017
info@rwsleighter.com
WWW.RWSLEIGHTER.COM

CONFIDENTIAL - ALL RIGHTS RESERVED

SEAL

REGISTERED ARCHITECT COMMONWEALTH OF PENNSYLVANIA JAMES R. SCHROCK, RA #017777

PROJECT
LOYALHANNA APARTMENT RENOVATIONS
1111 JEFFERSON STREET
LATROBE, PENNSYLVANIA 15650

OWNER
WESTMORELAND COUNTY HOUSING AUTHORITY
167 SOUTH GREENGATE ROAD
GREENSBURG, PENNSYLVANIA 15601

REVISION

NO.	DATE	DESCRIPTION

DATE	PROJECT NUMBER
MAY 6, 2019	R17-077-04

DESIGNED	DRAWN	CHECKED
----	----	----

SHEET NAME
ELEVATIONS

SHEET NUMBER
A-201

P:\077 - Westmoreland County Housing Authority\R17-077-04 - WCHA Loyalhanna\Dwg\Sheets\A-201.dwg, Date: 5/8/2019 3:51:16 PM, Plotted By: SEAN KEFFER

TYPICAL AT ALL EIFS

FOR ALL CAULKING - JOINT SEALANTS ON THE EIFS EXTERIOR THE CONTRACTOR SHALL REMOVE THE EXISTING SEALANT COMPLETELY AND REPLACE WITH THE SIKA HYFLEX 150LM SEALANT. **THE CONTRACTOR SHALL TAKE CARE NOT TO CUT THE EIFS MESH WITHIN THE EXPANSION JOINT AREAS WHILE REMOVING THE EXISTING SEALANTS. IF THE MESH IS DAMAGED THE CONTRACTOR SHALL BE RESPONSIBLE AT HIS OWN COST TO REPAIR THE EIFS COMPLETELY.**

TYPICAL AT ALL BALCONIES

FOR THE BALCONY SURFACES THAT HAVE EXISTING COATINGS ON THEM THE CONTRACTOR SHALL PREPARE THE SUBSTRATE PROPERLY A PER THE TECHNICAL DATA SHEETS OF THE SIKALASTIC 710 / 735 SYSTEM, ALONG WITH THE RECOAT PRIMER. FOR THE CEILING SURFACES OF THE BALCONIES THAT HAVE EXISTING COATINGS ON THEN PREPARE THE SUBSTRATE AS PER THE TECHNICAL DATA SHEET FOR THE SIKAGARD G10W ACRYLIC COATING AND APPLY IN A TWO-COAT APPLICATION.

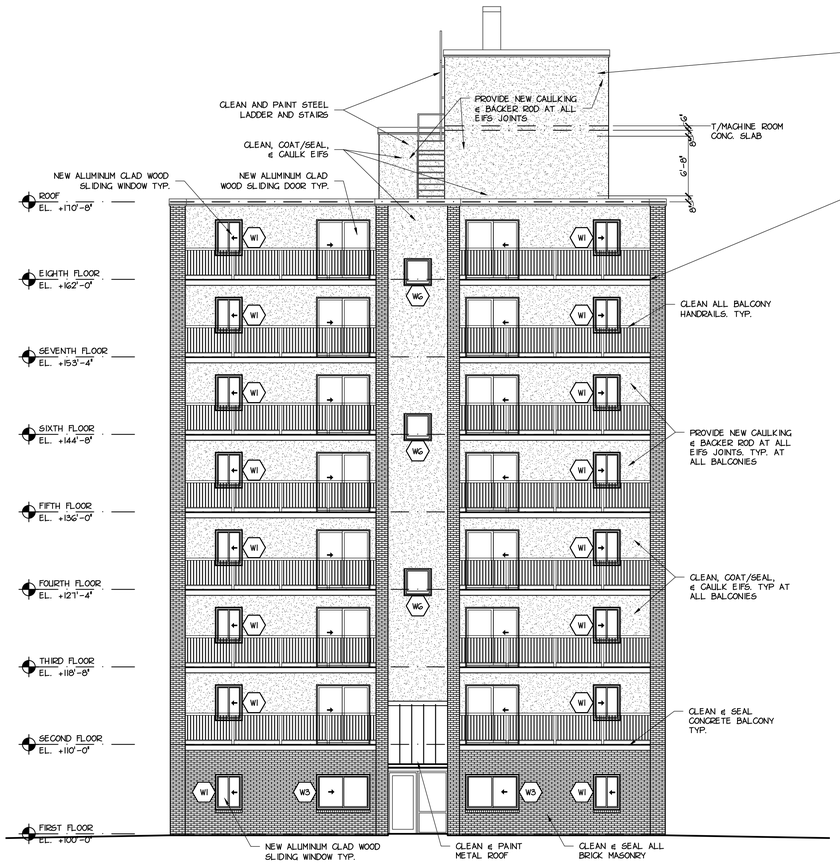

1 A-202 ELEVATION
SCALE: 1/8" = 1'-0"

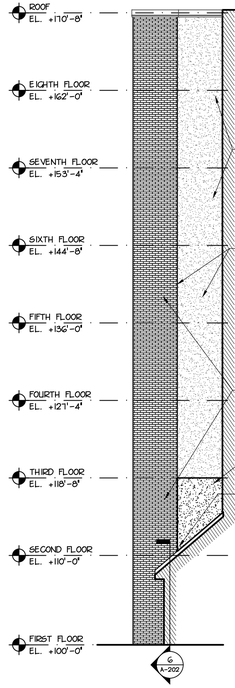

2 A-202 ELEVATION
SCALE: 1/8" = 1'-0"

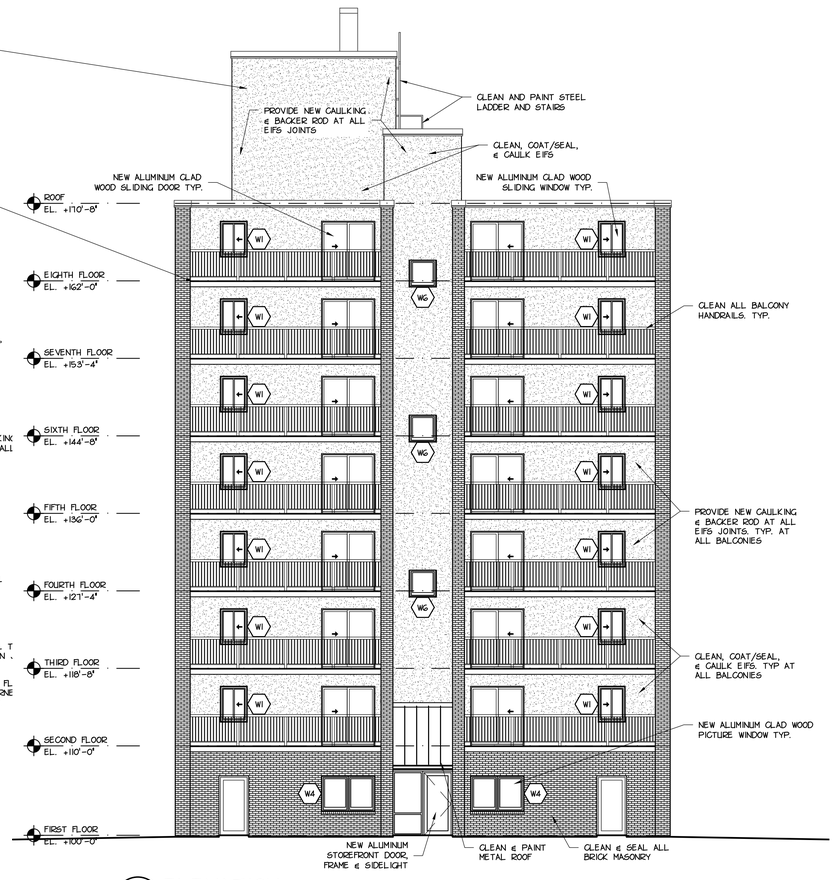

3 A-202 ELEVATION
SCALE: 1/8" = 1'-0"

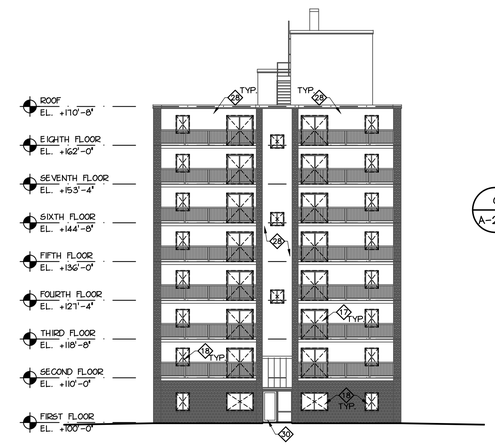

4 A-202 DEMOLITION ELEVATION
SCALE: 1/16" = 1'-0"

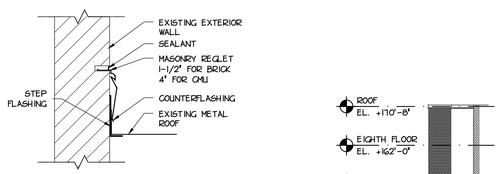

6 A-202 MASONRY REGLET DETAIL
SCALE: 1 1/2" = 1'-0"

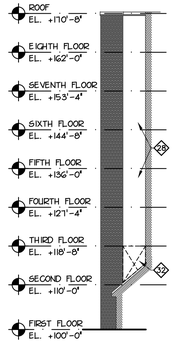

4 A-202 DEMOLITION ELEVATION
SCALE: 1/16" = 1'-0"

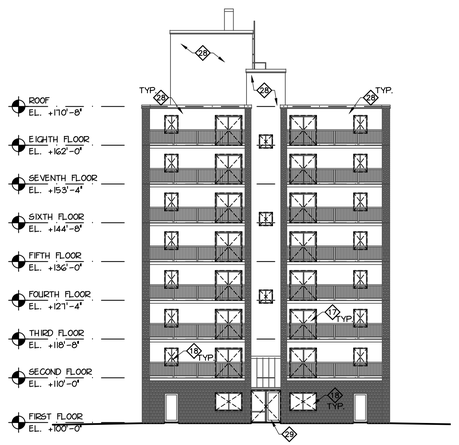

5 A-202 DEMOLITION ELEVATION
SCALE: 1/16" = 1'-0"

GENERAL EXTERIOR & BALCONY REPAIR AND PROTECTION NOTES

1. FOR ALL SPALL CONCRETE REPAIRS OVERHEAD ON THE BALCONIES, CHIP OUT ALL WEAK AND DELAMINATED CONCRETE AND SAW-CUT THE PERIMETER ½" IN SHARP ANGLE CUTS AND PATCH FLUSH WITH SIKAQUICK VOH PATCHING MORTAR. TO REPAIR ALL SPALLED AREAS ON THE EDGES OF THE BALCONIES PLACE A FORM AND FILL WITH SIKAQUICK 1000. IF THERE ARE ANY GAPS AROUND THE RAILING POSTS PLACE A ½"X ½" BEAD OF SIKAFLEX 15LM SEALANT.
2. FOR THE BALCONY SURFACES THAT HAVE EXISTING COATINGS ON THEM THE CONTRACTOR SHALL PREPARE THE SUBSTRATE PROPERLY A PER THE TECHNICAL DATA SHEETS OF THE SIKALASTIC 710 / 735 SYSTEM, ALONG WITH THE RECOAT PRIMER. FOR THE CEILING SURFACES OF THE BALCONIES THAT HAVE EXISTING COATINGS ON THEN PREPARE THE SUBSTRATE AS PER THE TECHNICAL DATA SHEET FOR THE SIKAGARD G10W ACRYLIC COATING AND APPLY IN A TWO-COAT APPLICATION.
3. FOR ALL CAULKING - JOINT SEALANTS ON THE EIFS EXTERIOR THE CONTRACTOR SHALL REMOVE THE EXISTING SEALANT COMPLETELY AND REPLACE WITH THE SIKA HYFLEX 150LM SEALANT. **THE CONTRACTOR SHALL TAKE CARE NOT TO CUT THE EIFS MESH WITHIN THE EXPANSION JOINT AREAS WHILE REMOVING THE EXISTING SEALANTS. IF THE MESH IS DAMAGED THE CONTRACTOR SHALL BE RESPONSIBLE AT HIS OWN COST TO REPAIR THE EIFS COMPLETELY.**

EIFS RESTORATION

CLEANING:
- -WET EIFS EXTERIOR USING A LOW PRESSURE SPRAYER AND WATER
- -APPLY A CLEANING SOLUTION DESIGNED TO REMOVE EIFS STAINING AND MILDEW AT A PRESSURE OF 30-50 PSI. CAUTION SHALL BE TAKEN TO NOT USE A HIGH-PRESSURE SPRAYER THAT MAY DAMAGE THE EXTERIOR FINISH OF THE EIFS
- -RINSE EIFS WALL USING HIGHER PRESSURE WATER (<600 PSI) TO REMOVE THE CLEANING SOLUTION AND EMBEDDED MILDEW AND SURFACE CONTAMINANTS

EIFS COATING AND AESTHETIC IMPROVEMENT:
- -FOLLOWING CLEANING PROCEDURES FOR ENTIRE SURFACE OF EIFS. REPAIR ANY AREAS OF DAMAGE
- -SPRAY APPLY TWO COATS OF AN EMULSIFIED ACRYLIC COATING TO THE SURFACE OF THE EIFS AT THE COAT MANUFACTURERS RECOMMENDED APPLICATION RATE

DRAWING NOTES

1. REFER TO SHEET AD-101 FOR GENERAL DEMOLITION & NUMBERED DEMOLITION NOTES

RW SLEIGHTER
ENGINEERS & ARCHITECTS
1060 EBERLY WAY
LEMONT FURNACE, PA 15456
Phone 724.438.4010
Fax 724.438.4017
info@rwsleighter.com
WWW.RWSLEIGHTER.COM

CONFIDENTIAL - ALL RIGHTS RESERVED

SEAL

PROJECT
LOYALHANNA APARTMENT RENOVATIONS
1111 JEFFERSON STREET
LATROBE, PENNSYLVANIA 15650

OWNER
WESTMORELAND COUNTY HOUSING AUTHORITY
167 SOUTH GREENGATE ROAD
GREENSBURG, PENNSYLVANIA 15601

REVISION

NO.	DATE	DESCRIPTION

DATE	PROJECT NUMBER
MAY 6, 2019	R17-077-04

DESIGNED	DRAWN	CHECKED
---	---	---

SHEET NAME
ELEVATIONS

SHEET NUMBER
A-202

P:\077 - Westmoreland County Housing Authority\R17-077-04 - WCHA Loyalhanna\Dwg\Sheets\A-202.dwg, Date: 5/8/2019 3:53:44 PM, Plotted By: SEAN KEIFER

TYPICAL AT ALL EIFS

FOR ALL CAULKING - JOINT SEALANTS ON THE EIFIS EXTERIOR THE CONTRACTOR SHALL REMOVE THE EXISTING SEALANT COMPLETELY AND REPLACE WITH THE SIKA HYFLEX 150LM SEALANT. **THE CONTRACTOR SHALL TAKE CARE NOT TO CUT THE EIFIS MESH WITHIN THE EXPANSION JOINT AREAS WHILE REMOVING THE EXISTING SEALANTS, IF THE MESH IS DAMAGED THE CONTRACTOR SHALL BE RESPONSIBLE AT HIS OWN COST TO REPAIR THE EIFIS COMPLETELY.**

TYPICAL AT ALL BALCONIES

FOR THE BALCONY SURFACES THAT HAVE EXISTING COATINGS ON THEM THE CONTRACTOR SHALL PREPARE THE SUBSTRATE PROPERLY A PER THE TECHNICAL DATA SHEETS OF THE SIKALASTIC 710 / 735 SYSTEM, ALONG WITH THE RECOAT PRIMER. FOR THE CEILING SURFACES OF THE BALCONIES THAT HAVE EXISTING COATINGS ON THEN PREPARE THE SUBSTRATE AS PER THE TECHNICAL DATA SHEET FOR THE SIKAGARD 670W ACRYLIC COATING AND APPLY IN A TWO-COAT APPLICATION.



1 A-203 ELEVATION
SCALE: 1/8" = 1'-0"

GENERAL EXTERIOR & BALCONY REPAIR AND PROTECTION NOTES

1. FOR ALL SPALL CONCRETE REPAIRS OVERHEAD ON THE BALCONIES, CHIP OUT ALL WEAK AND DELAMINATED CONCRETE AND SAW-CUT THE PERIMETER ½" IN SHARP ANGLE CUTS AND PATCH FLUSH WITH SIKAQUICK VOH PATCHING MORTAR. TO REPAIR ALL SPALLED AREAS ON THE EDGES OF THE BALCONIES PLACE A FORM AND FILL WITH SIKAQUICK 1000. IF THERE ARE ANY GAPS AROUND THE RAILING POSTS PLACE A ½"X ½" BEAD OF SIKAFLEX 15LM SEALANT.
2. FOR THE BALCONY SURFACES THAT HAVE EXISTING COATINGS ON THEM THE CONTRACTOR SHALL PREPARE THE SUBSTRATE PROPERLY A PER THE TECHNICAL DATA SHEETS OF THE SIKALASTIC 710 / 735 SYSTEM, ALONG WITH THE RECOAT PRIMER. FOR THE CEILING SURFACES OF THE BALCONIES THAT HAVE EXISTING COATINGS ON THEN PREPARE THE SUBSTRATE AS PER THE TECHNICAL DATA SHEET FOR THE SIKAGARD 670W ACRYLIC COATING AND APPLY IN A TWO-COAT APPLICATION.
3. FOR ALL CAULKING - JOINT SEALANTS ON THE EIFIS EXTERIOR THE CONTRACTOR SHALL REMOVE THE EXISTING SEALANT COMPLETELY AND REPLACE WITH THE SIKA HYFLEX 150LM SEALANT. **THE CONTRACTOR SHALL TAKE CARE NOT TO CUT THE EIFIS MESH WITHIN THE EXPANSION JOINT AREAS WHILE REMOVING THE EXISTING SEALANTS, IF THE MESH IS DAMAGED THE CONTRACTOR SHALL BE RESPONSIBLE AT HIS OWN COST TO REPAIR THE EIFIS COMPLETELY.**

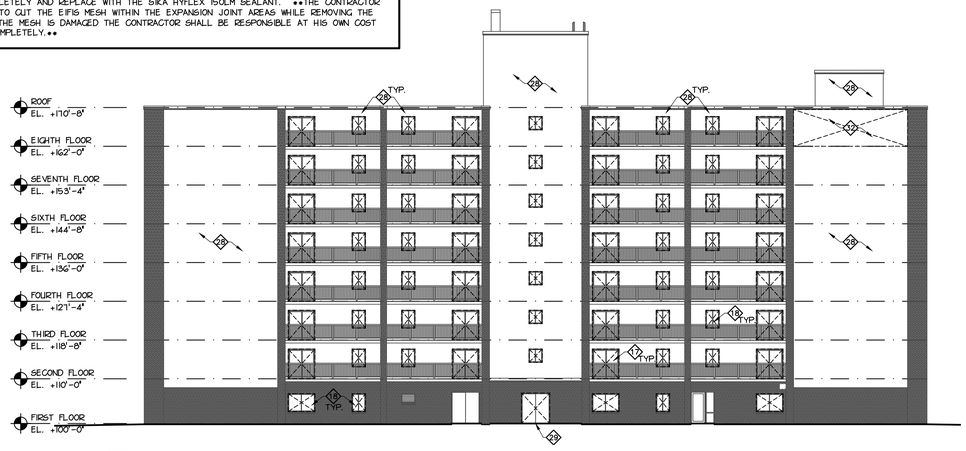
ROOF EL. +170'-8"
EIGHTH FLOOR EL. +162'-0"
SEVENTH FLOOR EL. +153'-4"
SIXTH FLOOR EL. +144'-8"
FIFTH FLOOR EL. +136'-0"
FOURTH FLOOR EL. +127'-4"
THIRD FLOOR EL. +118'-8"
SECOND FLOOR EL. +110'-0"
FIRST FLOOR EL. +100'-0"
TYP.
TYP.
TYP.
TYP.
TYP.
28
28
28

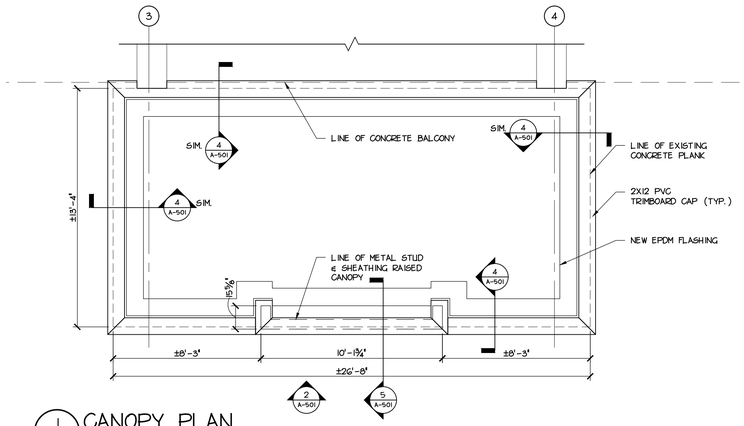

1 A-501 CANOPY PLAN
SCALE: 1/4" = 1'-0"

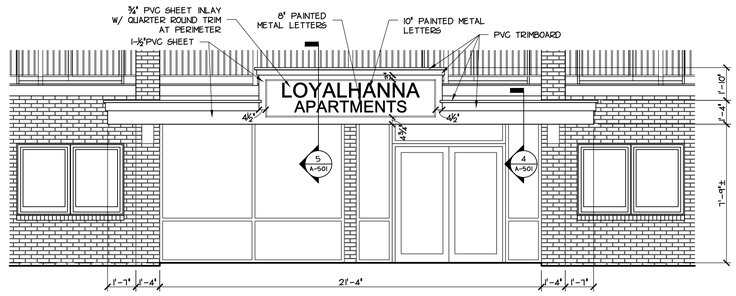

2 A-501 ENLARGED CANOPY ELEVATION
SCALE: 1/4" = 1'-0"

3 A-501 ENLARGED DEMOLITION CANOPY ELEVATION
SCALE: 1/4" = 1'-0"

4 A-501 SECTION
SCALE: 1 1/2" = 1'-0"

5 A-501 SECTION
SCALE: 1 1/2" = 1'-0"

RW SLEIGHTER
ENGINEERS & ARCHITECTS
1060 EBERLY WAY
LEMONT FURNACE, PA 15456
Phone 724.438.4010
Fax 724.438.4017
info@rwsleighter.com
WWW.RWSLEIGHTER.COM

CONFIDENTIAL - ALL RIGHTS RESERVED

SEAL

REGISTERED ARCHITECT COMMONWEALTH OF PENNSYLVANIA SCHROCK, RAYMOND

PROJECT
LOYALHANNA APARTMENT RENOVATIONS
1111 JEFFERSON STREET
LATROBE, PENNSYLVANIA 15650

OWNER
WESTMORELAND COUNTY HOUSING AUTHORITY
167 SOUTH GREENGATE ROAD
GREENSBURG, PENNSYLVANIA 15601

REVISION

NO.	DATE	DESCRIPTION

DATE	PROJECT NUMBER
MAY 6, 2019	R17-077-04

DESIGNED	DRAWN	CHECKED
----	----	----

SHEET NAME
CANOPY DETAILS

SHEET NUMBER
A-501

P:\077 - Westmoreland County Housing Authority\R17-077-04 - WCHA Loyalhanna\Dwg\Sheets\A-501.dwg, Date: 5/8/2019 3:57:09 PM, Plotted By: SEAN KEFFER

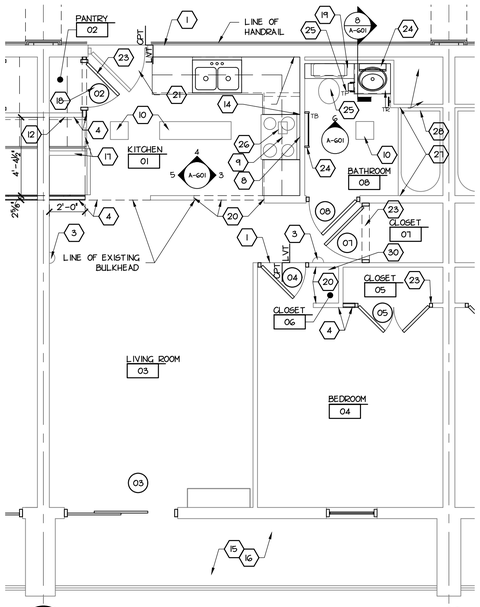

1 A-601 ENLARGED FLOOR PLAN
SCALE: 1/4" = 1'-0"

PLAN NORTH

NUMBERED NOTES

1. GC TO PROVIDE TRANSITION STRIP AS REQUIRED FOR TRANSITION BETWEEN FLOORING TYPES TO ALIGN WITH INSIDE FACE OF EXISTING DOOR JAMB.
2. GC TO PROVIDE 1-5/8" METAL STUD WITH 1/2" GWB ON EACH SIDE WITH SOUND BATT INSULATION WITHIN. FIELD VERIFY EXISTING WALL WIDTH. WALL INFILL TO MATCH EXISTING. ENSURE SEAMLESS TRANSITION TO EXISTING ADJACENT GWB. PRIME & PAINT WALL TO MATCH EXISTING.
3. GC TO PATCH & REPAIR EXISTING GWB CEILING/WALLS AT LOCATIONS OF REMOVED LIGHT FIXTURES. MATERIALS TO MATCH EXISTING ADJACENT CONDITIONS
4. GC TO PROVIDE 1/2" GWB ON EACH FACE OF 1-5/8" METAL STUD AT NEW WALL PARTITION. LOCATION OF WALL AS INDICATED ON PLANS. ALIGN WITH FACE OF ADJACENT WALL/BULKHEAD. FIELD VERIFY EXISTING WALL WIDTH AND MATCH. PROVIDE OPENING OF APPROPRIATE SIZE FOR NEW WOOD DOOR & TIMELY DOOR FRAME IF NEW DOOR IS SHOWN. (SIZE INDICATED ON DOOR SCHEDULE)
5. GC TO PROVIDE 5/8" GWB ON ONE FACE OF 3-5/8" METAL STUD PLUMBING WALL ON EXISTING FIRE RATED WALL PARTITION. ENSURE THAT THE FIRE RATING OF EXISTING PARTITION IS MAINTAINED
6. GC TO PROVIDE 1/2" GWB ON ONE FACE OF 3-5/8" METAL STUD PLUMBING WALL ON EXISTING FIRE RATED WALL PARTITION. FIELD VERIFY & MATCH EXISTING WIDTH OF WALL. ENSURE THAT THE FIRE RATING OF EXISTING PARTITION IS MAINTAINED
7. GC TO PROVIDE GWB PATCH & REPAIR AT AREA OF WALL REMOVAL. ALIGN WITH NEW BATHROOM PARTITION WALL.
8. GC TO PROVIDE CERAMIC TILE BACKSPLASH AT WALL ABOVE RANGE AND WALL ADJACENT TO RANGE (TO FRONT EDGE OF WALL CABINET). GROUT TILE AND GROUT GAP BETWEEN RANGE HOOD AND CERAMIC TILE. PROVIDE CEMENT BACKER BOARD AND SCHLUTER TRIM ALONG EXPOSED EDGES.
9. GC TO PROVIDE & INSTALL RECIRCULATING RANGE HOOD. EC TO MAKE ELEC CONNECTION.
10. GC TO PATCH & REPAIR AREA OF REMOVED RECESSED LIGHT FIXTURES. MATCH EXISTING ADJACENT MATERIALS TO ENSURE SEAMLESS TRANSITION.
11. GC TO INSTALL RECESSED MEDICINE CABINET & BATHROOM ACCESSORIES AS INDICATED ON THE PLAN AND WITHIN THE BATHROOM ACCESSORY SCHEDULE.
12. GC TO PATCH & REPAIR AREA OF REMOVED SHELVES AND RELATED HARDWARE TO MATCH EXISTING ADJACENT CONDITIONS TO ENSURE SEAMLESS TRANSITION.
13. GC TO PROVIDE 5/8" GWB ON 3-5/8" METAL STUD TO EXTEND BULKHEAD/CEILING IN KITCHEN/BATHROOM AS INDICATED ON SHEET 1/A-901 & 5/A-901. ALIGN BOTTOM OF BULKHEAD/CEILING WITH EXISTING HEIGHT (APPROX. 7'-0") AND FINISH TO MATCH EXISTING ADJACENT MATERIALS.
14. GC TO PATCH & REPAIR WALLS/CEILINGS AT LOCATIONS OF REMOVED CABINETS. CEILINGS & WALLS TO MATCH EXISTING CONDITIONS.
15. GC TO CLEAN AND SEAL CONCRETE BALCONY. COLOR TO BE APPROVED BY OWNER & ARCHITECT.
16. GC TO PATCH & REPAIR CONCRETE BALCONIES AT LOCATION OF 1X4 REMOVAL ON BALCONY CEILINGS. MATCH EXISTING MATERIALS
17. GC TO PATCH & REPAIR CEILING/BULKHEAD/WALL AT AREA OF PARTITION REMOVAL TO MATCH EXISTING ADJACENT MATERIALS AND ENSURE SEAMLESS TRANSITION
18. GC TO PROVIDE 5 FIXED SHELVES IN THE PANTRY CLOSET
19. GC TO PROVIDE & INSTALL WALL MOUNTED STORAGE CABINET IN THE BATHROOM ABOVE THE TOILET.
20. GC TO PATCH & REPAIR AREA OF ACCORDION DOOR & RELATED HARDWARE REMOVAL. MATERIALS TO MATCH EXISTING ADJACENT MATERIALS TO ENSURE SEAMLESS TRANSITION
21. GC TO INSTALL LARGE 30" X 36" KICKPLATE ON EXISTING UNIT ENTRANCE DOORS. DOOR AND FRAME TO BE PAINTED
22. GC TO PROVIDE/CUT NEW OPENING FOR BEDROOM DOOR AS INDICATED ON PLANS. DOOR & FRAME SIZES LOCATED IN THE DOOR SCHEDULE
23. GC TO PROVIDE NEW WOOD DOOR & TIMELY FRAME IN OPENING WHERE EXISTING ACCORDION DOOR AND FRAME WERE REMOVED. SIZE LOCATED IN DOOR SCHEDULE
24. GC TO PROVIDE SURFACE MOUNTED MEDICINE CABINET & BATHROOM ACCESSORIES AS INDICATED ON THE PLAN AND WITHIN THE BATHROOM ACCESSORY SCHEDULE
25. PC TO REMOVE TOILET. GC TO INSTALL LVT. PC TO TO REINSTALL TOILET WITH NEW WAX RING & JOHNNY BOLTS
26. MC TO PATCH REPAIR AREA OF REMOVED EXHAUST GRILL. MATCH EXISTING ADJACENT MATERIALS TO ENSURE SEAMLESS TRANSITION. INSTALL NEW GRILL AS INDICATED ON PLUMBING PLANS AS PART OF NEW WORK.
27. GC TO PROVIDE & INSTALL NEW CURVED SHOWER ROD
28. PC TO PROVIDE & INSTALL NEW SHOWER HEAD
29. GC TO PROVIDE 3 5/4" METAL STUDS WITH GWB (MATCH EXISTING THICKNESS) TO FRAME WALL END. ALIGN WITH EXISTING WALL TO ENSURE SEAMLESS TRANSITION. PROVIDE BLOCKING FOR TOILET ACCESSORY AND ADEQUATE SPACE FOR ELECTRICAL BOX (COORDINATE WITH EC). FINISH TO MATCH EXISTING ADJACENT MATERIALS.
30. REINSTALL EXISTING METAL SHELVING

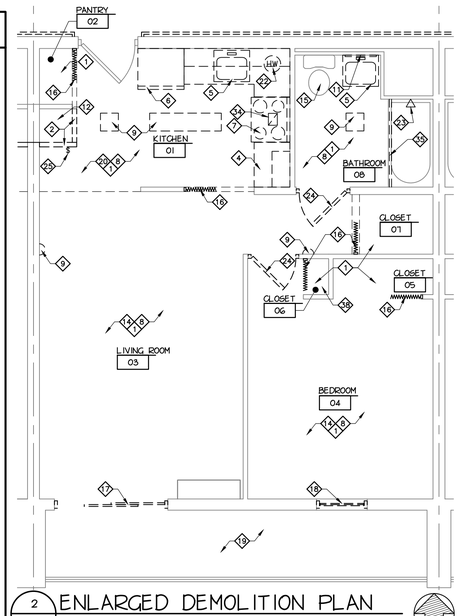

2 A-601 ENLARGED DEMOLITION PLAN
SCALE: 1/4" = 1'-0"

PLAN NORTH

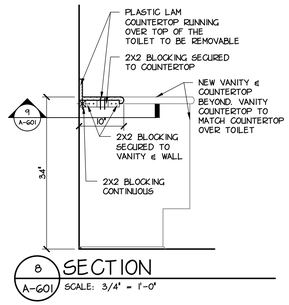

8 A-601 SECTION
SCALE: 3/4" = 1'-0"

NUMBERED DEMOLITION NOTES

1. GC TO REMOVE FLOORING, INCLUDING BASE. REMOVE ALL GLUES AND RESIDUE. PREP SUBSTRATE FOR NEW FLOORING IN ACCORDANCE WITH FLOORING MANUFACTURER'S REQUIREMENTS.
2. GC TO REMOVE EXISTING WALL PARTITION ENTIRELY FROM FLOOR TO CEILING/BULKHEAD. LIMIT DISTURBANCE AND DAMAGE TO ADJACENT WALLS, FLOOR & CEILING. PATCH EXISTING WALLS, FLOOR AND CEILING.
3. GC TO REMOVE EXISTING DOORS, FRAMES AND RELATED HARDWARE. LIMIT DISTURBANCE AND DAMAGE TO ADJACENT WALLS, FLOOR AND CEILING. PATCH EXISTING WALLS FLOOR AND CEILING.
4. GC TO REMOVE KITCHEN CABINETS AND COUNTERTOPS INCLUDING PANTRY CABINETS (PANTRY CABINETS LOCATED IN FOUR EXISTING ADA UNITS ONLY). LIMIT DISTURBANCE AND DAMAGE TO ADJACENT WALLS, FLOOR & CEILING. PATCH EXISTING WALLS, FLOOR AND CEILING.
5. GC TO REMOVE SINK. PC TO DISCONNECT PLUMBING LINES AND TEMPORARILY CAP FOR NEW WORK. LIMIT DISTURBANCE AND DAMAGE TO ADJACENT WALLS, FLOOR & CEILING. GC TO PATCH EXISTING WALLS, FLOOR AND CEILING.
6. GC TO DISCONNECT AND REMOVE ALL REFRIGERATORS. REFRIGERATORS ARE TO BE TEMPORARILY STORED WITHIN APARTMENT UNIT OR TURNED OVER TO OWNER.
7. GC TO REMOVE EXISTING RANGE AND TURN-OVER TO OWNER.
8. EC TO DISCONNECT AND REMOVE RECEPTACLES AND LIGHT SWITCHES ALONG WITH COVER PLATE THROUGHOUT APARTMENT. PREPARE FOR NEW RECEPTACLES, SWITCHES & COVER PLATES
9. EC TO DISCONNECT AND REMOVE LIGHT FIXTURES. REWORK WIRING FOR NEW LIGHT FIXTURES AS INDICATED AS PART OF NEW WORK ON E-101. LIMIT DISTURBANCE AND DAMAGE TO ADJACENT WALLS, FLOOR & CEILING. GC TO PATCH EXISTING WALLS, FLOOR AND CEILING.
10. EC TO DISCONNECT & REMOVE VENT HOOD.
11. GC TO REMOVE EXISTING WALL MOUNTED MIRROR. LIMIT DISTURBANCE AND DAMAGE TO WALLS. PATCH WALLS TO MATCH EXISTING CONDITIONS AS PART OF NEW WORK.
12. GC TO REMOVE SHELVES, RODS AND RELATED HARDWARE FROM CLOSETS AS INDICATED. LIMIT DISTURBANCE AND DAMAGE TO WALLS. PATCH EXISTING WALLS TO MATCH EXISTING FINISH.
13. EC TO DISCONNECT (BACK TO PANEL) AND REMOVE LIGHT SWITCH.
14. GC TO REMOVE EXISTING CEILING TILE, GRID AND RELATED HANGERS. LIMIT DISTURBANCE AND DAMAGE TO WALLS. (FIRST FLOOR ONLY)
15. EXISTING TOILET TO BE RELISED, PC TO REMOVE ALL CAULKING FROM BASE AND CLEAN PRIOR TO REINSTALLATION
16. REMOVE EXISTING ACCORDION DOORS & PREPARE FOR NEW WORK
17. REMOVE EXISTING SLIDING GLASS DOORS, FRAMES AND ALL RELATED HARDWARE. (FLRS 2-8) LIMIT DISTURBANCE AND DAMAGE TO ADJACENT WALLS, FLOOR AND CEILING. PATCH EXISTING WALLS, FLOOR AND CEILING.
18. REMOVE EXISTING WINDOW, FRAME AND RELATED HARDWARE. LIMIT DISTURBANCE AND DAMAGE TO ADJACENT WALLS, FLOOR AND CEILING. PATCH EXISTING WALLS, FLOOR AND CEILING. REMOVE ALL EXISTING WINDOWS.
19. REMOVE 1X4 BOARDS LOCATED ON THE UNDERSIDE OF BALCONIES IF PRESENT. PATCH REMAINING HOLES.
20. REMOVE CEILING MOUNTED MONITORING DEVICE LOCATED IN APARTMENTS. PATCH AND REPAIR CEILING TO MATCH EXISTING ADJACENT MATERIALS AND FINISHES
21. REMOVE EXISTING ALUMINUM HANDRAIL ON FLOORS 2 THRU 8, MODIFY, POWDER COAT AND REINSTALL OVER CONTINUOUS TRIM BOARD AS SHOWN ON DETAIL 13/A-101 & 14/A-101.
22. PC TO REMOVE EXISTING HOT WATER HEATER IN APARTMENTS & PREPARE FOR NEW DOMESTIC HOT WATER SYSTEM.
23. PC TO REMOVE EXISTING SHOWER HEADS AND PREPARE FOR NEW SHOWER HEAD.
24. GC TO REMOVE EXISTING DOOR & RELATED HARDWARE. LEAVE EXISTING TIMELY DOOR FRAME TO BE CLEANED AND PAINTED
25. EC TO DISCONNECT AND REMOVE LIGHT SWITCH TO BE RELOCATED
26. EC TO DISCONNECT AND REMOVE RECEPTACLE TO BE RELOCATED
27. EC TO CAREFULLY REMOVE LIGHT FIXTURE TO REUSE WITH NEW CEILING TILE AND GRID .
28. GC TO REMOVE EXISTING CAULKING FROM ALL JOINTS AT EIFS WITHOUT DAMAGING MESH. IF MESH IS DAMAGED MUST REPAIR AT OWN EXPENSE. CLEAN & PREPARE FOR NEW WORK.
29. GC TO REMOVE EXISTING DOOR, FRAME & RELATED HARDWARE
30. GC TO REMOVE EXISTING PANIC HARDWARE FROM ALUMINUM STOREFRONT DOOR & PREPARE FOR NEW WORK.
31. GC TO REMOVE PORTION OF EXISTING PARTITION WALL TO ALLOW FOR INSTALLATION OF DOOR & FRAME. REFER TO FLOOR PLAN FOR DOOR LOCATION & SIZE.
32. GC TO REMOVE EIFS PANEL TO NEAREST EXPANSION JOINT. CLEAN & PREPARE FOR NEW EIFS.
33. GC TO REMOVE EXISTING LETTERING FROM EXTERIOR BUILDING WALL. PROVIDE SEAMLESS PATCH, REPAIR & SEAL OF EXISTING CONDITIONS. MATCH EXISTING ADJACENT MATERIALS.
34. MC TO REMOVE EXISTING EXHAUST GRILL. LIMIT DISTURBANCE AND DAMAGE TO CEILING. PATCH OPENING TO MATCH EXISTING ADJACENT CONDITIONS.
35. GC TO REMOVE EXISTING SHOWER ROD AND PREPARE FOR NEW WORK.
36. EC TO DISCONNECT & REMOVE EMERGENCY CALL STATION TO BE RELOCATED.
37. GC TO REMOVE PORTION OF EXISTING WALL PARTITION FROM FLOOR TO CEILING/BULKHEAD. REMOVE PORTION OF GWB TO NEAREST EXISTING STUD BEYOND THE 5 5/8" REQUIRED REMOVAL. LIMIT DISTURBANCE AND DAMAGE TO ADJACENT WALLS, FLOOR & CEILING. PREPARE EXISTING FRAMING FOR NEW WORK.
38. REMOVE AND REPAINT EXISTING METAL SHELVING AND RELATED HARDWARE BEFORE REINSTALLING

LEGEND

ROOM NAME → KITCHEN / 101 (FLOOR LEVEL / UNIT NUMBER)	
1	NUMBERED DEMOLITION NOTE
1	NUMBERED GENERAL CONSTRUCTION NOTE
O.H.	OPPOSITE HAND
1 / A-601 (VIEW NUMBER / SHEET NUMBER)	

GENERAL DEMOLITION NOTES

1. ALL DEMOLITION DEBRIS, WASTE MATERIAL, EXCESS FILL, TREES, LIMBS, ROOTS, RUBBISH, AND TRASH IS TO BE CONTAINERIZED ON SITE AS GENERATED.
2. THE GENERAL CONTRACTOR SHALL PROVIDE AND MAINTAIN ROLL-OFF BOX(ES) AND/OR DUMPSTER(S).
3. THE GENERAL CONTRACTOR SHALL IMMEDIATELY REMOVE FROM THE SITE, TRANSPORT AND DISPOSE AT AN APPROVED OFF SITE DISPOSAL FACILITY, ALL ROLL-OFF BOX(ES) AND/OR DUMPSTER(S) WHEN FULL. THIS MAY INCLUDE BUT NOT BE LIMITED TO BUILDING DEMOLITION DEBRIS.
4. THE OWNER SHALL BE GIVEN THE OPPORTUNITY TO COLLECT AND RETAIN AT THEIR FACILITY ANY ITEMS TO BE REMOVED ON THIS PROJECT. THIS MAY INCLUDE BUT NOT BE LIMITED TO DOORS, PLUMBING FIXTURES, LIGHT FIXTURES, ETC. CONTRACTOR(S) SHALL COORDINATE DEMOLITION WORK WITH, AND NOTIFY THE OWNER, PRIOR TO REMOVAL OF ITEMS FROM SITE.
5. EXAMINE EXISTING CONDITIONS PRIOR TO COMMENCEMENT OF WORK, INCLUDING, BUT NOT LIMITED TO, ELEMENTS SUBJECT TO DAMAGE OR MOVEMENT DURING CUTTING AND PATCHING.
6. FURNISH PROTECTION FROM ELEMENTS FOR AREAS WHICH MAY BE EXPOSED BY UNCOVERING WORK.
7. PRIME CONTRACTORS ARE RESPONSIBLE FOR CUTTING & PATCHING ANY AREAS OF EXISTING WALLS, FLOORS OR CEILINGS THAT IS REQUIRED FOR THEIR WORK. PRIME CONTRACTORS ARE ALSO RESPONSIBLE FOR REPAIRING PORTIONS OF EXISTING SURFACES WHICH ARE DAMAGED DURING THEIR DEMOLITION WORK.
8. PROVIDE TEMPORARY SUPPORT TO ENSURE STRUCTURAL INTEGRITY OF THE WORK. PROVIDE DEVICES AND METHODS TO PROTECT OTHER PORTIONS OF PROJECT FROM DAMAGE. PROVIDE TEMPORARY, SAFE FLOORING IN AREAS OF WORK.
9. GENERAL CONTRACTOR IS RESPONSIBLE FOR ALL DEMOLITION UNLESS SPECIFICALLY INDICATED TO BE COMPLETED BY HVAC, PLUMBING OR ELECTRICAL CONTRACTORS. HVAC, PLUMBING AND ELECTRICAL CONTRACTORS ARE RESPONSIBLE FOR DEMOLITION OF ALL WORK WITHIN THEIR DISCIPLINE.
10. REFER TO ENLARGED DEMOLITION PLANS FOR SPECIFIC DEMOLITION IN THE APARTMENTS.
11. REFER TO DEMOLITION ELEVATION PLANS FOR SPECIFIC DEMOLITION ON THE EXTERIOR OF THE BUILDING

GENERAL NOTES

1. FIELD VERIFY ALL EXISTING CONDITIONS INCLUDING, BUT NOT LIMITED TO: DIMENSIONS, LOCATIONS OF PLUMBING LINES AND FIXTURES, ELECTRIC LINES AND FIXTURES AND HVAC EQUIPMENT. CONTRACTORS ARE RESPONSIBLE FOR REVIEWING THE COMPLETE SET OF CONSTRUCTION DOCUMENTS AND FIELD CONDITIONS TO DETERMINE THE FULL SCOPE OF WORK REQUIRED.
2. DRAWINGS ARE THE GRAPHIC AND PICTORIAL PORTIONS OF THE CONTRACT DOCUMENTS SHOWING THE DESIGN, LOCATION AND DIMENSIONS OF THE WORK. CONTRACTORS ARE TO REFER TO THE SPECIFICATIONS FOR THE WRITTEN REQUIREMENTS FOR MATERIALS, EQUIPMENT, CONSTRUCTION SYSTEMS, STANDARDS FOR WORKMANSHIP OF THE WORK, AND PERFORMANCE OF RELATED SERVICES.
3. THE INTENT OF THE CONTRACT DOCUMENTS IS TO INCLUDE ALL ITEMS NECESSARY FOR THE PROPER EXECUTION AND COMPLETION OF THE WORK BY THE CONTRACTORS. THE CONTRACT DOCUMENTS ARE COMPLIMENTARY, AND WHAT IS REQUIRED BY ONE SHALL BE BINDING AS IF REQUIRED BY ALL.
4. DO NOT SCALE DRAWINGS.
5. ALL INTERIOR DIMENSIONS INDICATED ARE TO THE FINISHED FACE OF GWB.
6. ALL ITEMS NOTED ON DRAWINGS ARE NEW UNLESS SPECIFICALLY NOTED AS EXISTING OR NOT IN CONTRACT (N.I.C.).
7. REFER TO CIVIL DRAWINGS FOR CONTINUATION OF SIDEWALKS AND EXTENTS OF SITEWORK.
8. AT AREAS OF DEMOLITION INCLUDING, BUT NOT LIMITED TO REMOVAL OF WALL, SIGN, WALL MOUNTED FIXTURE, ROOF VENT, ETC., PROVIDE SEAMLESS PATCH, REPAIR AND SEAL OF EXISTING CONDITIONS. MATCH EXISTING ADJACENT MATERIALS.
9. DOORS IN NEW PARTITIONS SHOULD BE CENTERED ON WALL OR 2" FROM ADJACENT WALL AT DOOR HINGE.
10. FOR DOOR HEAD & JAMB DETAILS, REFER TO SHEET A-801.
11. IN ALL CASES, PROVIDE MEANS TO FURNISH AND INSTALL.
12. GC IS RESPONSIBLE FOR PATCHING AND FINISHING ALL WALLS, FLOORS AND CEILINGS WHERE DEMOLITION HAS OCCURRED. PATCHING AND FINISHES ARE TO MATCH ADJACENT FINISHES.
13. GC IS TO COMPLETE WORK IN ONE (1) KITCHEN OF EACH TYPE AS A MOCK-UP., APPROVED BY ARCHITECT AND OWNER, BEFORE PROCEEDING WITH WORK IN OTHER APARTMENTS.

TYPE 'A' APARTMENT

ROOM FINISH SCHEDULE

MATERIAL	FINISHES	REMARKS
B. VINYL COMPOSITION TILE C. CARPET (BROADLOOM) D. RUBBER G. DRYWALL J. EXISTING TO REMAIN L. LUXURY VINYL TILE	1. PRE-FINISHED 2. PAINTED	1. MATCH EXISTING CEILING HEIGHT 2. ACOUSTIC CEILING TILE TO BE PLASTIC COATED 3. ACOUSTIC CEILING TILE TO MATCH EXISTING METAL TILE ON FIRST FLOOR ONLY

ROOM NUMBER	ROOM NAME	FLOOR MATERIAL	FLOOR FINISH	BASE MATERIAL	BASE FINISH	BASE COLOR	WALLS NORTH MATERIAL	WALLS NORTH FINISH	WALLS NORTH COLOR	WALLS SOUTH MATERIAL	WALLS SOUTH FINISH	WALLS SOUTH COLOR	WALLS EAST MATERIAL	WALLS EAST FINISH	WALLS EAST COLOR	WALLS WEST MATERIAL	WALLS WEST FINISH	WALLS WEST COLOR	WNSCT MATERIAL	WNSCT FINISH	WNSCT COLOR	CEILING MATERIAL	CEILING FINISH	CEILING COLOR	CEILING HEIGHT	REMARKS
01	KITCHEN	L	1	-	D	1	-	J	2	-	J	2	-	J	2	-	J	2	-	-	-	J	2	-	-	-
02	PANTRY	L	1	-	D	1	-	J	2	-	J	2	-	G	2	-	J	2	-	-	-	J	2	-	-	-
03	LIVING ROOM	L	1	-	D	1	-	J	2	-	J	2	-	J	2	-	J	2	-	-	-	J	2	-	-	1,3
04	BEDROOM	C	1	-	D	1	-	J	2	-	J	2	-	J	2	-	J	2	-	-	-	J	2	-	-	1,3
05	CLOSET	C	1	-	D	1	-	J	2	-	J	2	-	J	2	-	-	-	-	-	-	J	2	-	-	-
06	CLOSET	C	1	-	D	1	-	J	2	-	J	2	-	J	2	-	-	-	-	-	-	J	2	-	-	-
07	CLOSET	L	1	-	D	1	-	J	2	-	J	2	-	J	2	-	-	-	-	-	-	J	2	-	-	-
08	BATHROOM	L	1	-	D	1	-	J	2	-	J	2	-	J	2	-	-	-	-	-	-	J	2	-	-	-

DOOR SCHEDULE

DOOR NUMBER	LABEL	SIZE WIDTH X HT.	TYPE	MATERIAL	FRAME TYPE	FRAME MATERIAL	FRAME SILL DETAILS	FRAME JAMB DETAILS	FRAME HEAD DETAILS	HW SET NUMBER	GENERAL REMARKS
01		-----	J	-	J	-	-	-	-	04	MATERIALS: M. METAL, W. WOOD, J. EXISTING TO REMAIN. LABEL: A 3-HR, B 1.5-HR, C 1 HR, D 20 MIN, E 2-HR. REMARKS: 2,3 & 4
02		2'-6" X 6'-8"	A	W	I	M	-	-	-	02	1
03		6'-0" X 6'-8"	2	-	-	-	SS	JS	HS	--	REFER TO A-601 FOR INFO
04		2'-8" X 6'-8"	A	W	J	-	-	-	-	01	1 & 2
05		PR 2'-0" X 6'-8"	A	W	I	M	-	-	-	03	1
07		3'-0" X 6'-8"	A	W	I	M	-	-	-	02	1
08		2'-8" X 6'-8"	A	W	J	-	-	-	-	01	1 & 2

REMARKS:
1. 1-3/8" SOLID CORE FLUSH WOOD DOOR
2. PAINT EXISTING TIMELY DOOR FRAME
3. PAINT EXISTING HOLLOW METAL DOOR
4. PROVIDE LARGE KICKPLATE

BATHROOM ACCESSORY SCHEDULE

ITEM NUMBER	DESCRIPTION	MANUFACTURER	MODEL NUMBER	REMARKS
1	36" GRAB BAR	A.J. WASHROOM ACCESSORIES	-----	1-1/2" TYPE 304 STAINLESS STEEL 18 GUAGE
2	42" GRAB BAR	A.J. WASHROOM ACCESSORIES	-----	1-1/2" TYPE 304 STAINLESS STEEL 18 GUAGE
3	TOWEL RING (TR)	BRADLEY	9334	
4	24" TOWEL BAR (TB)	BRADLEY	9054	
5	SURFACE MTD. TOILET PAPER HOLDER (TP)	BRADLEY	5085	
6	CURVED SHOWER ROD	BRADLEY	9530	

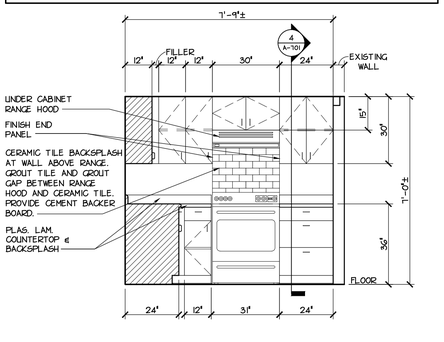

3 A-601 ELEVATION
SCALE: 3/8" = 1'-0"

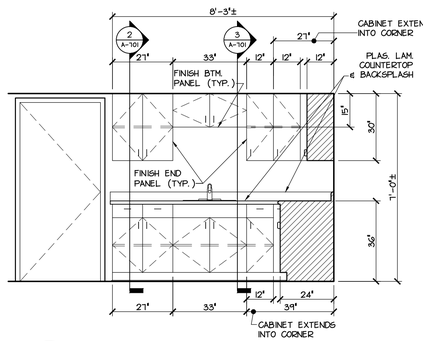

4 A-601 ELEVATION
SCALE: 3/8" = 1'-0"

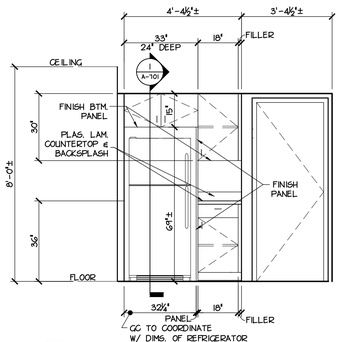

5 A-601 ELEVATION
SCALE: 3/8" = 1'-0"

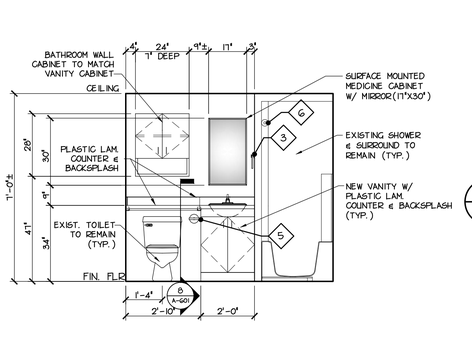

6 A-601 ELEVATION
SCALE: 3/8" = 1'-0"

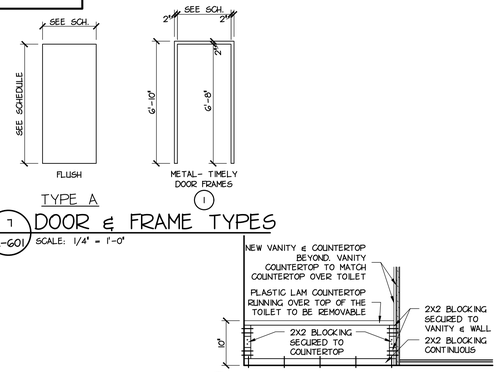

9 A-601 SECTION
SCALE: 3/4" = 1'-0"

RW SLEIGHTER
ENGINEERS & ARCHITECTS
1060 EBERLY WAY
LEMONT FURNACE, PA 15456
Phone 724.438.4010
Fax 724.438.4017
info@rwsleighter.com
WWW.RWSLEIGHTER.COM

CONFIDENTIAL - ALL RIGHTS RESERVED

SEAL

PROJECT
LOYALHANNA APARTMENT RENOVATIONS
1111 JEFFERSON STREET
LATROBE, PENNSYLVANIA 15650

OWNER
WESTMORELAND COUNTY HOUSING AUTHORITY
167 SOUTH GREENGATE ROAD
GREENSBURG, PENNSYLVANIA 15601

REVISION

NO.	DATE	DESCRIPTION

DATE	PROJECT NUMBER
MAY 6, 2019	R17-077-04
DESIGNED	DRAWN / CHECKED
----	---- / ----

SHEET NAME
ENLARGED APARTMENT PLAN - TYPE 'A'

SHEET NUMBER
A-601

P:\077 - Westmoreland County Housing Authority\R17-077-04 - WCHA Loyalhanna\Dwg\Sheets\A-601.dwg, Date: 5/9/2019 3:31:16 PM, Plotted By: SEAN KEIFFER

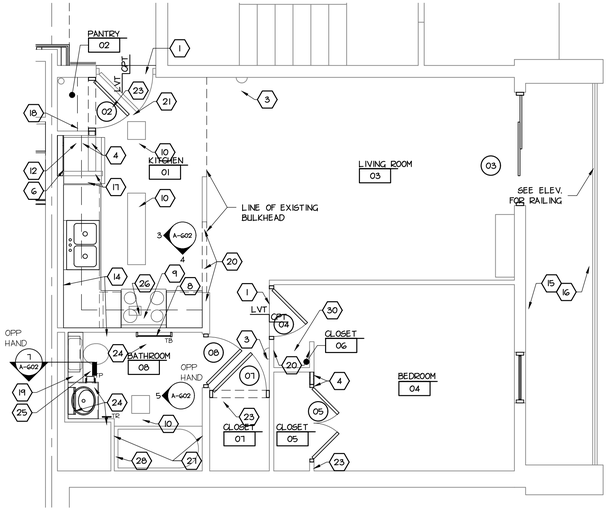

1 A-602 ENLARGED FLOOR PLAN

SCALE: 1/4" = 1'-0"

PLAN NORTH

NUMBERED NOTES

1. GC TO PROVIDE TRANSITION STRIP AS REQUIRED FOR TRANSITION BETWEEN FLOORING TYPES TO ALIGN WITH INSIDE FACE OF EXISTING DOOR JAMB.
2. GC TO PROVIDE 1-5/8" METAL STUD WITH ½" GWB ON EACH SIDE WITH SOUND BATT INSULATION WITHIN. FIELD VERIFY EXISTING WALL WIDTH. WALL INFILL TO MATCH EXISTING. ENSURE SEAMLESS TRANSITION TO EXISTING ADJACENT GWB. PRIME & PAINT WALL TO MATCH EXISTING.
3. GC TO PATCH & REPAIR EXISTING GWB CEILING/WALLS AT LOCATIONS OF REMOVED LIGHT FIXTURES. MATERIALS TO MATCH EXISTING ADJACENT CONDITIONS
4. GC TO PROVIDE ½" GWB ON EACH FACE OF 1-5/8" METAL STUD AT NEW WALL PARTITION. LOCATION OF WALL AS INDICATED ON PLANS. ALIGN WITH FACE OF ADJACENT WALL./BULKHEAD. FIELD VERIFY EXISTING WALL WIDTH AND MATCH. PROVIDE OPENING OF APPROPRIATE SIZE FOR NEW WOOD DOOR & TIMELY DOOR FRAME IF NEW DOOR IS SHOWN. (SIZE INDICATED ON DOOR SCHEDULE)
5. GC TO PROVIDE 5/8" GWB ON ONE FACE OF 3-5/8" METAL STUD PLUMBING WALL ON EXISTING FIRE RATED WALL PARTITION. ENSURE THAT THE FIRE RATING OF EXISTING PARTITION IS MAINTAINED
6. GC TO PROVIDE ½" GWB ON ONE FACE OF 3-5/8" METAL STUD PLUMBING WALL ON EXISTING FIRE RATED WALL PARTITION. FIELD VERIFY & MATCH EXISTING WIDTH OF WALL. ENSURE THAT THE FIRE RATING OF EXISTING PARTITION IS MAINTAINED
7. GC TO PROVIDE GWB PATCH & REPAIR AT AREA OF WALL REMOVAL. ALIGN WITH NEW BATHROOM PARTITION WALL.
8. GC TO PROVIDE CERAMIC TILE BACKSPLASH AT WALL ABOVE RANGE AND WALL ADJACENT TO RANGE (TO FRONT EDGE OF WALL CABINET). GROUT TILE AND GROUT GAP BETWEEN RANGE HOOD AND CERAMIC TILE. PROVIDE CEMENT BACKER BOARD AND SCHLUTER TRIM ALONG EXPOSED EDGES.
9. GC TO PROVIDE & INSTALL RECIRCULATING RANGE HOOD. EC TO MAKE ELEC CONNECTION.
10. GC TO PATCH & REPAIR AREA OF REMOVED RECESSED LIGHT FIXTURES. MATCH EXISTING ADJACENT MATERIALS TO ENSURE SEAMLESS TRANSITION.
11. GC TO INSTALL RECESSED MEDICINE CABINET & BATHROOM ACCESSORIES AS INDICATED ON THE PLAN AND WITHIN THE BATHROOM ACCESSORY SCHEDULE.
12. GC TO PATCH & REPAIR AREA OF REMOVED SHELVES AND RELATED HARDWARE TO MATCH EXISTING ADJACENT CONDITIONS TO ENSURE SEAMLESS TRANSITION.
13. GC TO PROVIDE 5/8" GWB ON 3-5/8" METAL STUD TO EXTEND BULKHEAD/CEILING IN KITCHEN/BATHROOM AS INDICATED ON SHEET 1/A-901 & 5/A-901. ALIGN BOTTOM OF BULKHEAD/CEILING WITH EXISTING HEIGHT (APPROX. 7'-0") AND FINISH TO MATCH EXISTING ADJACENT MATERIALS.
14. GC TO PATCH & REPAIR WALLS/CEILINGS AT LOCATIONS OF REMOVED CABINETS. CEILINGS & WALLS TO MATCH EXISTING CONDITIONS.
15. GC TO CLEAN AND SEAL CONCRETE BALCONY. COLOR TO BE APPROVED BY OWNER & ARCHITECT.
16. GC TO PATCH & REPAIR CONCRETE BALCONIES AT LOCATION OF 1X4 REMOVAL ON BALCONY CEILINGS. MATCH EXISTING MATERIALS
17. GC TO PATCH & REPAIR CEILING/BULKHEAD/WALL AT AREA OF PARTITION REMOVAL TO MATCH EXISTING ADJACENT MATERIALS AND ENSURE SEAMLESS TRANSITION
18. GC TO PROVIDE 5 FIXED SHELVES IN THE PANTRY CLOSET
19. GC TO PROVIDE & INSTALL WALL MOUNTED STORAGE CABINET IN THE BATHROOM ABOVE THE TOILET.
20. GC TO PATCH & REPAIR AREA OF ACCORDION DOOR & RELATED HARDWARE REMOVAL. MATERIALS TO MATCH EXISTING ADJACENT MATERIALS TO ENSURE SEAMLESS TRANSITION
21. GC TO INSTALL LARGE 30" X 36" KICKPLATE ON EXISTING UNIT ENTRANCE DOORS. DOOR AND FRAME TO BE PAINTED
22. GC TO PROVIDE/CUT NEW OPENING FOR BEDROOM DOOR AS INDICATED ON PLANS. DOOR & FRAME SIZES LOCATED IN THE DOOR SCHEDULE
23. GC TO PROVIDE NEW WOOD DOOR & TIMELY FRAME IN OPENING WHERE EXISTING ACCORDION DOOR AND FRAME WERE REMOVED. SIZE LOCATED IN DOOR SCHEDULE
24. GC TO PROVIDE SURFACE MOUNTED MEDICINE CABINET & BATHROOM ACCESSORIES AS INDICATED ON THE PLAN AND WITHIN THE BATHROOM ACCESSORY SCHEDULE
25. PC TO REMOVE TOILET. GC TO INSTALL LVT. PC TO TO REINSTALL TOILET WITH NEW WAX RING & JOHNNY BOLTS
26. MC TO PATCH REPAIR AREA OF REMOVED EXHAUST GRILL. MATCH EXISTING ADJACENT MATERIALS TO ENSURE SEAMLESS TRANSITION. INSTALL NEW GRILL AS INDICATED ON PLUMBING PLANS AS PART OF NEW WORK.
27. GC TO PROVIDE & INSTALL NEW CURVED SHOWER ROD
28. PC TO PROVIDE & INSTALL NEW SHOWER HEAD
29. GC TO PROVIDE 3⅝" METAL STUDS WITH GWB (MATCH EXISTING THICKNESS) TO FRAME WALL END. ALIGN WITH EXISTING WALL TO ENSURE SEAMLESS TRANSITION. PROVIDE BLOCKING FOR TOILET ACCESSORY AND ADEQUATE SPACE FOR ELECTRICAL BOX (COORDINATE WITH EC). FINISH TO MATCH EXISTING ADJACENT MATERIALS.
30. REINSTALL EXISTING METAL SHELVING

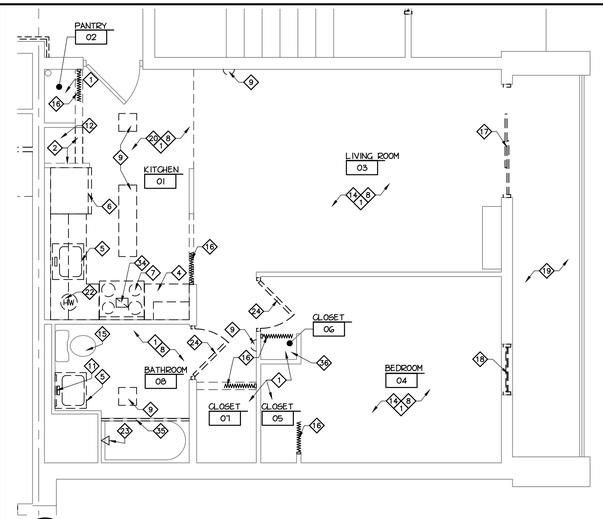

2 A-602 ENLARGED DEMOLITION PLAN

SCALE: 1/4" = 1'-0"

PLAN NORTH

NUMBERED DEMOLITION NOTES

1. GC TO REMOVE FLOORING, INCLUDING BASE. REMOVE ALL GLUES AND RESIDUE. PREP SUBSTRATE FOR NEW FLOORING IN ACCORDANCE WITH FLOORING MANUFACTURER'S REQUIREMENTS.
2. GC TO REMOVE EXISTING WALL PARTITION ENTIRELY FROM FLOOR TO CEILING/BULKHEAD. LIMIT DISTURBANCE AND DAMAGE TO ADJACENT WALLS, FLOOR & CEILING. PATCH EXISTING WALLS, FLOOR AND CEILING.
3. GC TO REMOVE EXISTING DOORS, FRAMES AND RELATED HARDWARE. LIMIT DISTURBANCE AND DAMAGE TO ADJACENT WALLS, FLOOR AND CEILING. PATCH EXISTING WALLS FLOOR AND CEILING.
4. GC TO REMOVE KITCHEN CABINETS AND COUNTERTOPS INCLUDING PANTRY CABINETS (PANTRY CABINETS LOCATED IN FOUR EXISTING ADA UNITS ONLY). LIMIT DISTURBANCE AND DAMAGE TO ADJACENT WALLS, FLOOR & CEILING. PATCH EXISTING WALLS, FLOOR AND CEILING.
5. GC TO REMOVE SINK. PC TO DISCONNECT PLUMBING LINES AND TEMPORARILY CAP FOR NEW WORK. LIMIT DISTURBANCE AND DAMAGE TO ADJACENT WALLS, FLOOR & CEILING. GC TO PATCH EXISTING WALLS, FLOOR AND CEILING.
6. GC TO DISCONNECT AND REMOVE ALL REFRIGERATORS. REFRIGERATORS ARE TO BE TEMPORARILY STORED WITHIN APARTMENT UNIT OR TURNED OVER TO OWNER.
7. GC TO REMOVE EXISTING RANGE AND TURN-OVER TO OWNER.
8. EC TO DISCONNECT AND REMOVE RECEPTACLES AND LIGHT SWITCHES ALONG WITH COVER PLATE THROUGHOUT APARTMENT. PREPARE FOR NEW RECEPTACLES, SWITCHES & COVER PLATES
9. EC TO DISCONNECT AND REMOVE LIGHT FIXTURES. REWORK WIRING FOR NEW LIGHT FIXTURES AS INDICATED AS PART OF NEW WORK ON E-101. LIMIT DISTURBANCE AND DAMAGE TO ADJACENT WALLS, FLOOR & CEILING. GC TO PATCH EXISTING WALLS, FLOOR AND CEILING.
10. EC TO DISCONNECT & REMOVE VENT HOOD.
11. GC TO REMOVE EXISTING WALL MOUNTED MIRROR. LIMIT DISTURBANCE AND DAMAGE TO WALLS. PATCH WALLS TO MATCH EXISTING CONDITIONS AS PART OF NEW WORK.
12. GC TO REMOVE SHELVES, RODS AND RELATED HARDWARE FROM CLOSETS AS INDICATED. LIMIT DISTURBANCE AND DAMAGE TO WALLS. PATCH EXISTING WALLS TO MATCH EXISTING FINISH.
13. EC TO DISCONNECT (BACK TO PANEL) AND REMOVE LIGHT SWITCH.
14. GC TO REMOVE EXISTING CEILING TILE, GRID AND RELATED HANGERS. LIMIT DISTURBANCE AND DAMAGE TO WALLS. (FIRST FLOOR ONLY)
15. EXISTING TOILET TO BE REUSED, PC TO REMOVE ALL CAULKING FROM BASE AND CLEAN PRIOR TO REINSTALLATION
16. REMOVE EXISTING ACCORDION DOORS & PREPARE FOR NEW WORK
17. REMOVE EXISTING SLIDING GLASS DOORS, FRAMES AND ALL RELATED HARDWARE. (FLRS 2-8) LIMIT DISTURBANCE AND DAMAGE TO ADJACENT WALLS, FLOOR AND CEILING. PATCH EXISTING WALLS, FLOOR AND CEILING.
18. REMOVE EXISTING WINDOW, FRAME AND RELATED HARDWARE. LIMIT DISTURBANCE AND DAMAGE TO ADJACENT WALLS, FLOOR AND CEILING. PATCH EXISTING WALLS, FLOOR AND CEILING. REMOVE ALL EXISTING WINDOWS.
19. REMOVE 1X4 BOARDS LOCATED ON THE UNDERSIDE OF BALCONIES IF PRESENT. PATCH REMAINING HOLES.
20. REMOVE CEILING MOUNTED MONITORING DEVICE LOCATED IN APARTMENTS. PATCH AND REPAIR CEILING TO MATCH EXISTING ADJACENT MATERIALS AND FINISHES
21. REMOVE EXISTING ALUMINUM HANDRAIL ON FLOORS 2 THRU 8, MODIFY, POWDER COAT AND REINSTALL OVER CONTINUOUS TRIM BOARD AS SHOWN ON DETAIL 13/A-701 & 14/A-701.
22. PC TO REMOVE EXISTING HOT WATER HEATER IN APARTMENTS & PREPARE FOR NEW DOMESTIC HOT WATER SYSTEM.
23. PC TO REMOVE EXISTING SHOWER HEADS AND PREPARE FOR NEW SHOWER HEAD.
24. GC TO REMOVE EXISTING DOOR & RELATED HARDWARE. LEAVE EXISTING TIMELY DOOR FRAME TO BE CLEANED AND PAINTED
25. EC TO DISCONNECT AND REMOVE LIGHT SWITCH TO BE RELOCATED
26. EC TO DISCONNECT AND REMOVE RECEPTACLE TO BE RELOCATED
27. EC TO CAREFULLY REMOVE LIGHT FIXTURE TO REUSE WITH NEW CEILING TILE AND GRID .
28. GC TO REMOVE EXISTING CAULKING FROM ALL JOINTS AT EIFS WITHOUT DAMAGING MESH. IF MESH IS DAMAGED MUST REPAIR AT OWN EXPENSE. CLEAN & PREPARE FOR NEW WORK.
29. GC TO REMOVE EXISTING DOOR, FRAME & RELATED HARDWARE
30. GC TO REMOVE EXISTING PANIC HARDWARE FROM ALUMINUM STOREFRONT DOOR & PREPARE FOR NEW WORK.
31. GC TO REMOVE PORTION OF EXISTING PARTITION WALL TO ALLOW FOR INSTALLATION OF DOOR & FRAME. REFER TO FLOOR PLAN FOR DOOR LOCATION & SIZE.
32. GC TO REMOVE EIFS PANEL TO NEAREST EXPANSION JOINT. CLEAN & PREPARE FOR NEW EIFS.
33. GC TO REMOVE EXISTING LETTERING FROM EXTERIOR BUILDING WALL. PROVIDE SEAMLESS PATCH, REPAIR & SEAL OF EXISTING CONDITIONS. MATCH EXISTING ADJACENT MATERIALS.
34. MC TO REMOVE EXISTING EXHAUST GRILL. LIMIT DISTURBANCE AND DAMAGE TO CEILING. PATCH OPENING TO MATCH EXISTING ADJACENT CONDITIONS.
35. GC TO REMOVE EXISTING SHOWER ROD AND PREPARE FOR NEW WORK
36. REMOVE AND REPAINT EXISTING METAL SHELVING AND RELATED HARDWARE BEFORE REINSTALLING

LEGEND

ROOM NAME → KITCHEN 101 (FLOOR LEVEL — UNIT NUMBER)

1	NUMBERED DEMOLITION NOTE
	NUMBERED GENERAL CONSTRUCTION NOTE
O.H.	OPPOSITE HAND
	VIEW NUMBER / SHEET NUMBER

GENERAL DEMOLITION NOTES

1. ALL DEMOLITION DEBRIS, WASTE MATERIAL, EXCESS FILL, TREES, LIMBS, ROOTS, RUBBISH, AND TRASH IS TO BE CONTAINERIZED ON SITE AS GENERATED.
2. THE GENERAL CONTRACTOR SHALL PROVIDE AND MAINTAIN ROLL-OFF BOX(ES) AND/OR DUMPSTER(S).
3. THE GENERAL CONTRACTOR SHALL IMMEDIATELY REMOVE FROM THE SITE, TRANSPORT AND DISPOSE AT AN APPROVED OFF SITE DISPOSAL FACILITY, ALL ROLL-OFF BOX(ES) AND/OR DUMPSTER(S) WHEN FULL. THIS MAY INCLUDE BUT NOT BE LIMITED TO BUILDING DEMOLITION DEBRIS.
4. THE OWNER SHALL BE GIVEN THE OPPORTUNITY TO COLLECT AND RETAIN AT THEIR FACILITY ANY ITEMS TO BE REMOVED ON THIS PROJECT. THIS MAY INCLUDE BUT NOT BE LIMITED TO DOORS, PLUMBING FIXTURES, LIGHT FIXTURES, ETC. CONTRACTOR(S) SHALL COORDINATE DEMOLITION WORK WITH, AND NOTIFY THE OWNER, PRIOR TO REMOVAL OF ITEMS FROM SITE.
5. EXAMINE EXISTING CONDITIONS PRIOR TO COMMENCEMENT OF WORK, INCLUDING, BUT NOT LIMITED TO, ELEMENTS SUBJECT TO DAMAGE OR MOVEMENT DURING CUTTING AND PATCHING.
6. FURNISH PROTECTION FROM ELEMENTS FOR AREAS WHICH MAY BE EXPOSED BY UNCOVERING WORK.
7. PRIME CONTRACTORS ARE RESPONSIBLE FOR CUTTING & PATCHING ANY AREAS OF EXISTING WALLS, FLOORS OR CEILINGS THAT IS REQUIRED FOR THEIR WORK. PRIME CONTRACTORS ARE ALSO RESPONSIBLE FOR REPAIRING PORTIONS OF EXISTING SURFACES WHICH ARE DAMAGED DURING THEIR DEMOLITION WORK.
8. PROVIDE TEMPORARY SUPPORT TO ENSURE STRUCTURAL INTEGRITY OF THE WORK. PROVIDE DEVICES AND METHODS TO PROTECT OTHER PORTIONS OF PROJECT FROM DAMAGE. PROVIDE TEMPORARY, SAFE FLOORING IN AREAS OF WORK.
9. GENERAL CONTRACTOR IS RESPONSIBLE FOR ALL DEMOLITION UNLESS SPECIFICALLY INDICATED TO BE COMPLETED BY HVAC, PLUMBING OR ELECTRICAL CONTRACTORS. HVAC, PLUMBING AND ELECTRICAL CONTRACTORS ARE RESPONSIBLE FOR DEMOLITION OF ALL WORK WITHIN THEIR DISCIPLINE.
10. REFER TO ENLARGED DEMOLITION PLANS FOR SPECIFIC DEMOLITION IN THE APARTMENTS.
11. REFER TO DEMOLITION ELEVATION PLANS FOR SPECIFIC DEMOLITION ON THE EXTERIOR OF THE BUILDING

GENERAL NOTES

1. FIELD VERIFY ALL EXISTING CONDITIONS INCLUDING, BUT NOT LIMITED TO, DIMENSIONS, LOCATIONS OF PLUMBING LINES AND FIXTURES, ELECTRIC LINES AND FIXTURES AND HVAC EQUIPMENT. CONTRACTORS ARE RESPONSIBLE FOR REVIEWING THE COMPLETE SET OF CONSTRUCTION DOCUMENTS AND FIELD CONDITIONS TO DETERMINE THE FULL SCOPE OF WORK REQUIRED.
2. DRAWINGS ARE THE GRAPHIC AND PICTORIAL PORTIONS OF THE CONTRACT DOCUMENTS SHOWING THE DESIGN, LOCATION AND DIMENSIONS OF THE WORK. CONTRACTORS ARE TO REFER TO THE SPECIFICATIONS FOR THE WRITTEN REQUIREMENTS FOR MATERIALS, EQUIPMENT, CONSTRUCTION SYSTEMS, STANDARDS FOR WORKMANSHIP OF THE WORK, AND PERFORMANCE OF RELATED SERVICES.
3. THE INTENT OF THE CONTRACT DOCUMENTS IS TO INCLUDE ALL ITEMS NECESSARY FOR THE PROPER EXECUTION AND COMPLETION OF THE WORK BY THE CONTRACTORS. THE CONTRACT DOCUMENTS ARE COMPLIMENTARY, AND WHAT IS REQUIRED BY ONE SHALL BE BINDING AS IF REQUIRED BY ALL.
4. DO NOT SCALE DRAWINGS.
5. ALL INTERIOR DIMENSIONS INDICATED ARE TO THE FINISHED FACE OF GWB.
6. ALL ITEMS NOTED ON DRAWINGS ARE NEW UNLESS SPECIFICALLY NOTED AS EXISTING OR NOT IN CONTRACT (N.I.C.).
7. REFER TO CIVIL DRAWINGS FOR CONTINUATION OF SIDEWALKS AND EXTENTS OF SITEWORK.
8. AT AREAS OF DEMOLITION INCLUDING, BUT NOT LIMITED TO REMOVAL OF WALL, SIGN, WALL MOUNTED FIXTURE, ROOF VENT, ETC., PROVIDE SEAMLESS PATCH, REPAIR AND SEAL OF EXISTING CONDITIONS. MATCH EXISTING ADJACENT MATERIALS.
9. DOORS IN NEW PARTITIONS SHOULD BE CENTERED ON WALL OR 2" FROM ADJACENT WALL AT DOOR HINGE.
10. FOR DOOR HEAD & JAMB DETAILS, REFER TO SHEET A-801.
11. IN ALL CASES, PROVIDE MEANS TO FURNISH AND INSTALL.
12. GC IS RESPONSIBLE FOR PATCHING AND FINISHING ALL WALLS, FLOORS AND CEILINGS WHERE DEMOLITION HAS OCCURRED. PATCHING AND FINISHES ARE TO MATCH ADJACENT FINISHES.
13. GC IS TO COMPLETE WORK IN ONE (1) KITCHEN OF EACH TYPE AS A MOCK-UP,, APPROVED BY ARCHITECT AND OWNER, BEFORE PROCEEDING WITH WORK IN OTHER APARTMENTS.

TYPE 'B' APARTMENT

ROOM FINISH SCHEDULE

MATERIAL: B. VINYL COMPOSITION TILE; C. CARPET (BROADLOOM); D. RUBBER; G. DRYWALL; J. EXISTING TO REMAIN; L. LUXURY VINYL TILE

FINISHES: 1. PRE-FINISHED; 2. PAINTED

REMARKS: 1. MATCH EXISTING CEILING HEIGHT; 2. ACOUSTIC CEILING TILE TO BE PLASTIC COATED; 3. ACOUSTIC CEILING TILE TO MATCH EXISTING METAL TILE ON FIRST FLOOR ONLY

ROOM NUMBER	ROOM NAME	FLOOR MATERIAL	FLOOR FINISH	BASE MATERIAL	BASE FINISH	BASE COLOR	WALLS NORTH MATERIAL	WALLS NORTH FINISH	WALLS NORTH COLOR	WALLS SOUTH MATERIAL	WALLS SOUTH FINISH	WALLS SOUTH COLOR	WALLS EAST MATERIAL	WALLS EAST FINISH	WALLS EAST COLOR	WALLS WEST MATERIAL	WALLS WEST FINISH	WALLS WEST COLOR	WALLS WNSCT MATERIAL	WALLS WNSCT FINISH	WALLS WNSCT COLOR	CEILING MATERIAL	CEILING FINISH	CEILING COLOR	CEILING HEIGHT	REMARKS
01	KITCHEN	L	1	D	1	J	2	J	2	J	2	J	2	J	2	–	–	–	J	2	J	–	–	–	1,3
02	PANTRY	L	1	D	1	J	2	J	2	J	2	J	2	J	2	–	–	–	J	2	J	–	–	–	–
03	LIVING ROOM	L	1	D	1	J	2	J	2	J	2	J	2	J	2	–	–	–	J	2	J	–	–	–	1,3
04	BEDROOM	C	1	D	1	J	2	J	2	J	2	J	2	J	2	–	–	–	J	2	J	–	–	–	1,3
05	CLOSET	C	1	D	1	J	2	J	2	J	2	J	2	J	2	–	–	–	J	2	J	–	–	–	–
06	CLOSET	C	1	D	1	J	2	J	2	J	2	J	2	J	2	–	–	–	J	2	J	–	–	–	–
07	CLOSET	L	1	D	1	J	2	J	2	J	2	J	2	J	2	–	–	–	J	2	J	–	–	–	–
08	BATHROOM	L	1	D	1	J	2	J	2	J	2	J	2	J	2	–	–	–	J	2	J	–	–	–	–

DOOR SCHEDULE

DOOR NUMBER	LABEL	SIZE WIDTH X HT.	DOOR TYPE	DOOR MATERIAL	DOOR FINISH	FRAME MATERIAL	FRAME SILL DETAILS	FRAME JAMB DETAILS	FRAME HEAD DETAILS	HW SET NUMBER	GENERAL REMARKS
01		----	J	–	–	–	–	–	–	04	2,3 & 4
02		2'-6" X 6'-8"	A	W	1	M	–	–	–	02	1
03		6'-0" X 6'-8"	2	–	–	–	SSJ	SJ	HJ	–	REFER TO A-801 FOR INFO
04		2'-8" X 6'-8"	A	W	J	–	–	–	–	01	1 & 2
05		PR 2'-0" X 6'-8"	A	W	1	M	–	–	–	03	1
07		3'-0" X 6'-8"	A	W	1	M	–	–	–	02	1
08		2'-8" X 6'-8"	A	W	J	–	–	–	–	01	1 & 2

MATERIALS: M. METAL; W. WOOD; J. EXISTING TO REMAIN

LABEL: A 3-HR; B 1.5-HR; C 1 HR; D 20 MIN.; E 2-HR

REMARKS:
1. 1-3/8" SOLID CORE FLUSH WOOD DOOR
2. PAINT EXISTING TIMELY DOOR FRAME
3. PAINT EXISTING DOOR AND FRAME
4. PROVIDE LARGE KICKPLATE

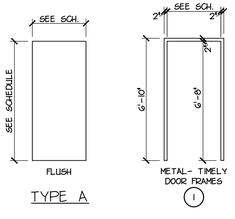

6 A-602 DOOR & FRAME TYPES

SCALE: 1/4" = 1'-0"

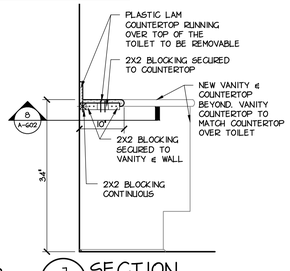

7 A-602 SECTION

SCALE: 3/4" = 1'-0"

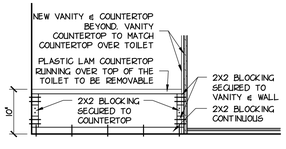

8 A-602 SECTION

SCALE: 3/4" = 1'-0"

BATHROOM ACCESSORY SCHEDULE

ITEM NUMBER	DESCRIPTION	MANUFACTURER	MODEL NUMBER	REMARKS
1	36" GRAB BAR	A.J. WASHROOM ACCESSORIES	-----	1-1/2" TYPE 304 STAINLESS STEEL 18 GUAGE
2	42" GRAB BAR	A.J. WASHROOM ACCESSORIES	-----	1-1/2" TYPE 304 STAINLESS STEEL 18 GUAGE
3	TOWEL RING (TR)	BRADLEY	9334	
4	24" TOWEL BAR (TB)	BRADLEY	9054	
5	SURFACE MTD. TOILET PAPER HOLDER (TP)	BRADLEY	5085	
6	CURVED SHOWER ROD	BRADLEY	9530	

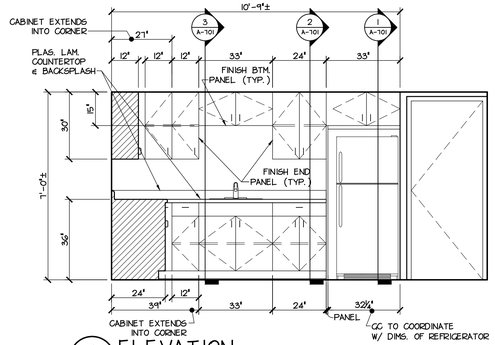

3 A-602 ELEVATION

SCALE: 3/8" = 1'-0"

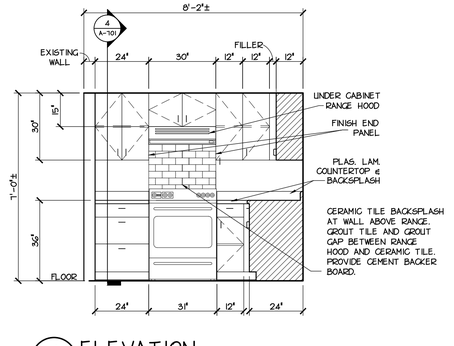

4 A-602 ELEVATION

SCALE: 3/8" = 1'-0"

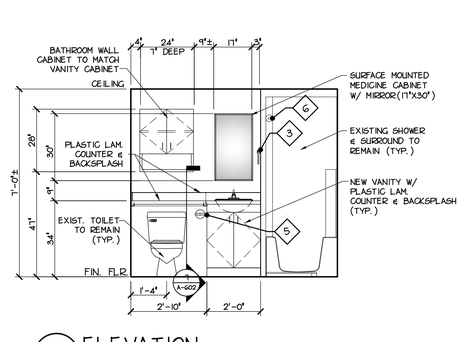

5 A-602 ELEVATION

SCALE: 3/8" = 1'-0"

RW SLEIGHTER
ENGINEERS & ARCHITECTS
1060 EBERLY WAY
LEMONT FURNACE, PA 15456
Phone 724.438.4010
Fax 724.438.4017
info@rwsleighter.com
WWW.RWSLEIGHTER.COM

CONFIDENTIAL - ALL RIGHTS RESERVED

SEAL

PROJECT: LOYALHANNA APARTMENT RENOVATIONS
1111 JEFFERSON STREET
LATROBE, PENNSYLVANIA 15650

OWNER: WESTMORELAND COUNTY HOUSING AUTHORITY
167 SOUTH GREENGATE ROAD
GREENSBURG, PENNSYLVANIA 15601

REVISION

NO.	DATE	DESCRIPTION

DATE: MAY 6, 2019
PROJECT NUMBER: R17-077-04
DESIGNED: ----
DRAWN: ----
CHECKED: ----

SHEET NAME: ENLARGED APARTMENT PLAN - TYPE 'B'

SHEET NUMBER: A-602

P:\077 - Westmoreland County Housing Authority\R17-077-04 - WCHA Loyalhanna\Dwg\Sheets\A-602.dwg, Date: 5/8/2019 3:59:21 PM, Plotted By: SEAN KEFFER

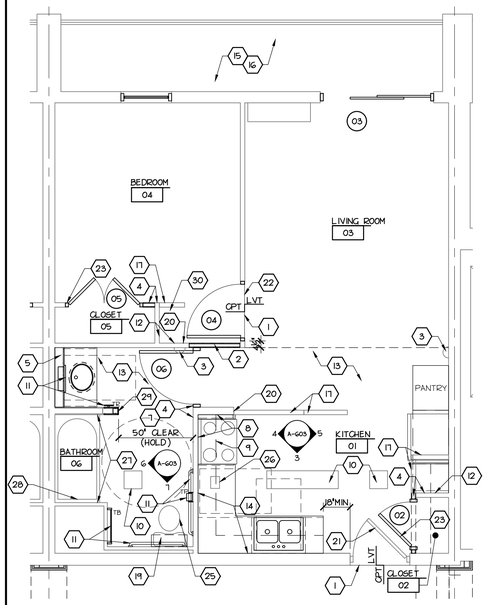

1 A-603 ENLARGED FLOOR PLAN

SCALE: 1/4" = 1'-0"

PLAN NORTH

UFAS APARTMENT

ROOM FINISH SCHEDULE

MATERIAL: B. VINYL COMPOSITION TILE; C. CARPET (BROADLOOM); D. RUBBER; G. MOISTURE RESISTANT DRYWALL; J. EXISTING TO REMAIN; L. LUXURY VINYL TILE

FINISHES: 1. PRE-FINISHED; 2. PAINTED

ROOM NUMBER	ROOM NAME	FLOOR MATERIAL	FLOOR FINISH	FLOOR COLOR	BASE MATERIAL	BASE FINISH	BASE COLOR	WALLS NORTH MATERIAL	WALLS NORTH FINISH	WALLS NORTH COLOR	WALLS SOUTH MATERIAL	WALLS SOUTH FINISH	WALLS SOUTH COLOR	WALLS EAST MATERIAL	WALLS EAST FINISH	WALLS EAST COLOR	WALLS WEST MATERIAL	WALLS WEST FINISH	WALLS WEST COLOR	WALLS WNSCT MATERIAL	WALLS WNSCT FINISH	WALLS WNSCT COLOR	CEILING MATERIAL	CEILING FINISH	CEILING COLOR	CEILING HEIGHT	REMARKS
01	KITCHEN	L	1	–	D	1	–	J	2	–	J	2	–	J	2	–	J	2	–	–	–	–	J	2	–	–	–
02	CLOSET	L	1	–	D	1	–	J	2	–	J	2	–	J	2	–	J	2	–	–	–	–	J	2	–	–	–
03	LIVING ROOM	L	1	–	D	1	–	J	2	–	J	2	–	J	2	–	J	2	–	–	–	–	J	2	–	–	1,3
04	BEDROOM	C	1	–	D	1	–	J	2	–	J	2	–	J	2	–	J	2	–	–	–	–	J	2	–	–	1,3
05	CLOSET	L	1	–	D	1	–	J	2	–	J	2	–	J	2	–	J	2	–	–	–	–	J	2	–	–	–
06	BATHROOM	L	1	–	D	1	–	J	2	–	J	2	–	J	2	–	J	2	–	–	–	–	J	2	–	–	–

DOOR SCHEDULE

DOOR NUMBER	LABEL	SIZE WIDTH X HT.	TYPE	DOOR MATERIAL	FRAME MATERIAL	FRAME SILL DETAILS	FRAME JAMB DETAILS	FRAME HEAD DETAILS	HW SET NUMBER	GENERAL REMARKS
01		----	J	–	J	–	–	–	04	2,3 & 4
02		2'-0" X 6'-8"	A	W	1	M	–	–	02	1
03		6'-0" X 6'-8"	2	–	–	–	S3	J3	H2	REFER TO A-801 FOR INFO
04		3'-0" X 6'-8"	A	W	1	M	–	–	01	1
05		PR 2'-0" X 6'-8"	A	W	1	M	–	–	03	1
06		3'-0" X 6'-8"	A	W	1	M	–	–	01	1

MATERIALS: M. METAL; W. WOOD; J. EXISTING TO REMAIN

LABEL: A 3-HR; B 1.5-HR; C 1 HR; D 20 MIN.; E 2-HR

REMARKS:
1. 1-3/8" SOLID CORE FLUSH WOOD DOOR
2. PAINT EXISTING TIMELY DOOR FRAME
3. PAINT EXISTING DOOR AND FRAME
4. PROVIDE LARGE KICKPLATE

NUMBERED NOTES

1. GC TO PROVIDE TRANSITION STRIP AS REQUIRED FOR TRANSITION BETWEEN FLOORING TYPES TO ALIGN WITH INSIDE FACE OF EXISTING DOOR JAMB.
2. GC TO PROVIDE 1-5/8" METAL STUD WITH 5/8" GWB ON EACH SIDE WITH SOUND BATT INSULATION WITHIN. FIELD VERIFY EXISTING WALL WIDTH. WALL INFILL TO MATCH EXISTING. ENSURE SEAMLESS TRANSITION TO EXISTING ADJACENT GWB. PRIME & PAINT WALL TO MATCH EXISTING.
3. GC TO PATCH & REPAIR EXISTING GWB CEILING/WALLS AT LOCATIONS OF REMOVED LIGHT FIXTURES. MATERIALS TO MATCH EXISTING ADJACENT CONDITIONS
4. GC TO PROVIDE 5/8" GWB ON EACH FACE OF 1-5/8" METAL STUD AT NEW WALL PARTITION. LOCATION OF WALL AS INDICATED ON PLANS. ALIGN WITH FACE OF ADJACENT WALL/BULKHEAD. FIELD VERIFY EXISTING WALL WIDTH AND MATCH. PROVIDE OPENING OF APPROPRIATE SIZE FOR NEW WOOD DOOR & TIMELY DOOR FRAME IF NEW DOOR IS SHOWN. (SIZE INDICATED ON DOOR SCHEDULE)
5. GC TO PROVIDE 5/8" GWB ON ONE FACE OF 3-5/8" METAL STUD PLUMBING WALL ON EXISTING FIRE RATED WALL PARTITION. ENSURE THAT THE FIRE RATING OF EXISTING PARTITION IS MAINTAINED
6. GC TO PROVIDE 1/2" GWB ON ONE FACE OF 3-5/8" METAL STUD PLUMBING WALL ON EXISTING FIRE RATED WALL PARTITION. FIELD VERIFY & MATCH EXISTING WIDTH OF WALL. ENSURE THAT THE FIRE RATING OF EXISTING PARTITION IS MAINTAINED
7. GC TO PROVIDE GWB PATCH & REPAIR AT AREA OF WALL REMOVAL. ALIGN WITH NEW BATHROOM PARTITION WALL.
8. GC TO PROVIDE CERAMIC TILE BACKSPLASH AT WALL ABOVE RANGE AND WALL ADJACENT TO RANGE (TO FRONT EDGE OF WALL CABINET). GROUT TILE AND GROUT GAP BETWEEN RANGE HOOD AND CERAMIC TILE. PROVIDE CEMENT BACKER BOARD AND SCHLUTER TRIM ALONG EXPOSED EDGES.
9. GC TO PROVIDE & INSTALL RECIRCULATING RANGE HOOD. EC TO MAKE ELEC CONNECTION.
10. GC TO PATCH & REPAIR AREA OF REMOVED RECESSED LIGHT FIXTURES. MATCH EXISTING ADJACENT MATERIALS TO ENSURE SEAMLESS TRANSITION.
11. GC TO INSTALL RECESSED MEDICINE CABINET & BATHROOM ACCESSORIES AS INDICATED ON THE PLAN AND WITHIN THE BATHROOM ACCESSORY SCHEDULE.
12. GC TO PATCH & REPAIR AREA OF REMOVED SHELVES AND RELATED HARDWARE TO MATCH EXISTING ADJACENT CONDITIONS TO ENSURE SEAMLESS TRANSITION.
13. GC TO PROVIDE 5/8" GWB ON 3-5/8" METAL STUD TO EXTEND BULKHEAD/CEILING IN KITCHEN/BATHROOM AS INDICATED ON SHEET 1/A-901 & 5/A-901. ALIGN BOTTOM OF BULKHEAD/CEILING WITH EXISTING HEIGHT (APPROX. 7'-0") AND FINISH TO MATCH EXISTING ADJACENT MATERIALS.
14. GC TO PATCH & REPAIR WALLS/CEILINGS AT LOCATIONS OF REMOVED CABINETS. CEILINGS & WALLS TO MATCH EXISTING CONDITIONS.
15. GC TO CLEAN AND SEAL CONCRETE BALCONY. COLOR TO BE APPROVED BY OWNER & ARCHITECT.
16. GC TO PATCH & REPAIR CONCRETE BALCONIES AT LOCATION OF 1X4 REMOVAL ON BALCONY CEILINGS. MATCH EXISTING MATERIALS
17. GC TO PATCH & REPAIR CEILING/BULKHEAD/WALL AT AREA OF PARTITION REMOVAL TO MATCH EXISTING ADJACENT MATERIALS AND ENSURE SEAMLESS TRANSITION
18. GC TO PROVIDE 5 FIXED SHELVES IN THE PANTRY CLOSET
19. GC TO PROVIDE & INSTALL WALL MOUNTED STORAGE CABINET IN THE BATHROOM ABOVE THE TOILET.
20. GC TO PATCH & REPAIR AREA OF ACCORDION DOOR & RELATED HARDWARE REMOVAL. MATERIALS TO MATCH EXISTING ADJACENT MATERIALS TO ENSURE SEAMLESS TRANSITION
21. GC TO INSTALL LARGE 30" X 36" KICKPLATE ON EXISTING UNIT ENTRANCE DOORS. DOOR AND FRAME TO BE PAINTED
22. GC TO PROVIDE/CUT NEW OPENING FOR BEDROOM DOOR AS INDICATED ON PLANS. DOOR & FRAME SIZES LOCATED IN THE DOOR SCHEDULE
23. GC TO PROVIDE NEW WOOD DOOR & TIMELY FRAME IN OPENING WHERE EXISTING ACCORDION DOOR AND FRAME WERE REMOVED. SIZE LOCATED IN DOOR SCHEDULE
24. GC TO PROVIDE SURFACE MOUNTED MEDICINE CABINET & BATHROOM ACCESSORIES AS INDICATED ON THE PLAN AND WITHIN THE BATHROOM ACCESSORY SCHEDULE
25. PC TO REMOVE TOILET. GC TO INSTALL LVT. PC TO TO REINSTALL TOILET WITH NEW WAX RING & JOHNNY BOLTS
26. MC TO PATCH REPAIR AREA OF REMOVED EXHAUST GRILL. MATCH EXISTING ADJACENT MATERIALS TO ENSURE SEAMLESS TRANSITION. INSTALL NEW GRILL AS INDICATED ON PLUMBING PLANS AS PART OF NEW WORK.
27. GC TO PROVIDE & INSTALL NEW CURVED SHOWER ROD
28. PC TO PROVIDE & INSTALL NEW SHOWER HEAD
29. GC TO PROVIDE 3 5/8" METAL STUDS WITH GWB (MATCH EXISTING THICKNESS) TO FRAME WALL END. ALIGN WITH EXISTING WALL TO ENSURE SEAMLESS TRANSITION. PROVIDE BLOCKING FOR TOILET ACCESSORY AND ADEQUATE SPACE FOR ELECTRICAL BOX (COORDINATE WITH EC). FINISH TO MATCH EXISTING ADJACENT MATERIALS.
30. REINSTALL EXISTING METAL SHELVING

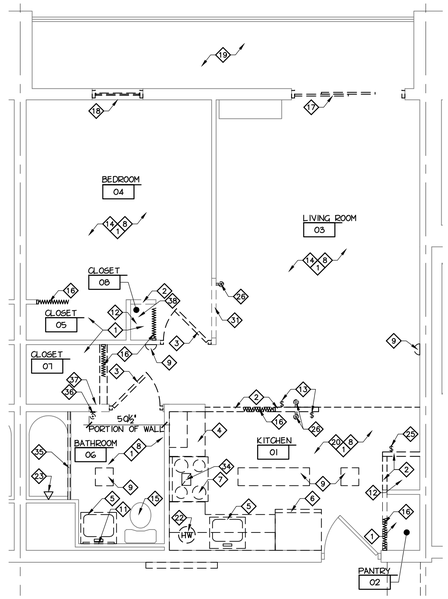

2 A-603 ENLARGED DEMOLITION PLAN

SCALE: 1/4" = 1'-0"

PLAN NORTH

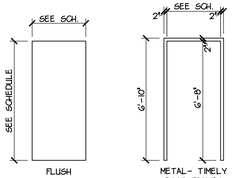

TYPE A

8 A-603 DOOR & FRAME TYPES

SCALE: 1/4" = 1'-0"

NUMBERED DEMOLITION NOTES

1. GC TO REMOVE FLOORING, INCLUDING BASE. REMOVE ALL GLUES AND RESIDUE. PREP SUBSTRATE FOR NEW FLOORING IN ACCORDANCE WITH FLOORING MANUFACTURER'S REQUIREMENTS.
2. GC TO REMOVE EXISTING WALL PARTITION ENTIRELY FROM FLOOR TO CEILING/BULKHEAD. LIMIT DISTURBANCE AND DAMAGE TO ADJACENT WALLS, FLOOR & CEILING. PATCH EXISTING WALLS, FLOOR AND CEILING.
3. GC TO REMOVE EXISTING DOORS, FRAMES AND RELATED HARDWARE. LIMIT DISTURBANCE AND DAMAGE TO ADJACENT WALLS, FLOOR AND CEILING. PATCH EXISTING WALLS FLOOR AND CEILING.
4. GC TO REMOVE KITCHEN CABINETS AND COUNTERTOPS INCLUDING PANTRY CABINETS (PANTRY CABINETS LOCATED IN FOUR EXISTING ADA UNITS ONLY). LIMIT DISTURBANCE AND DAMAGE TO ADJACENT WALLS, FLOOR & CEILING. PATCH EXISTING WALLS, FLOOR AND CEILING.
5. GC TO REMOVE SINK. PC TO DISCONNECT PLUMBING LINES AND TEMPORARILY CAP FOR NEW WORK. LIMIT DISTURBANCE AND DAMAGE TO ADJACENT WALLS, FLOOR & CEILING. GC TO PATCH EXISTING WALLS, FLOOR AND CEILING.
6. GC TO DISCONNECT AND REMOVE ALL REFRIGERATORS. REFRIGERATORS ARE TO BE TEMPORARILY STORED WITHIN APARTMENT UNIT OR TURNED OVER TO OWNER.
7. GC TO REMOVE EXISTING RANGE AND TURN-OVER TO OWNER.
8. EC TO DISCONNECT AND REMOVE RECEPTACLES AND LIGHT SWITCHES ALONG WITH COVER PLATE THROUGHOUT APARTMENT. PREPARE FOR NEW RECEPTACLES, SWITCHES & COVER PLATES
9. EC TO DISCONNECT AND REMOVE LIGHT FIXTURES. REWORK WIRING FOR NEW LIGHT FIXTURES AS INDICATED AS PART OF NEW WORK ON E-101. LIMIT DISTURBANCE AND DAMAGE TO ADJACENT WALLS, FLOOR & CEILING. GC TO PATCH EXISTING WALLS, FLOOR AND CEILING.
10. EC TO DISCONNECT & REMOVE VENT HOOD.
11. GC TO REMOVE EXISTING WALL MOUNTED MIRROR. LIMIT DISTURBANCE AND DAMAGE TO WALLS. PATCH WALLS TO MATCH EXISTING CONDITIONS AS PART OF NEW WORK.
12. GC TO REMOVE SHELVES, RODS AND RELATED HARDWARE FROM CLOSETS AS INDICATED. LIMIT DISTURBANCE AND DAMAGE TO WALLS. PATCH EXISTING WALLS TO MATCH EXISTING FINISH.
13. EC TO DISCONNECT (BACK TO PANEL) AND REMOVE LIGHT SWITCH.
14. GC TO REMOVE EXISTING CEILING TILE, GRID AND RELATED HANGERS. LIMIT DISTURBANCE AND DAMAGE TO WALLS. (FIRST FLOOR ONLY)
15. EXISTING TOILET TO BE REUSED, PC TO REMOVE ALL CAULKING FROM BASE AND CLEAN PRIOR TO REINSTALLATION
16. REMOVE EXISTING ACCORDION DOORS & PREPARE FOR NEW WORK
17. REMOVE EXISTING SLIDING GLASS DOORS, FRAMES AND ALL RELATED HARDWARE. (FLRS 2-8) LIMIT DISTURBANCE AND DAMAGE TO ADJACENT WALLS, FLOOR AND CEILING. PATCH EXISTING WALLS, FLOOR AND CEILING.
18. REMOVE EXISTING WINDOW, FRAME AND RELATED HARDWARE. LIMIT DISTURBANCE AND DAMAGE TO ADJACENT WALLS, FLOOR AND CEILING. PATCH EXISTING WALLS, FLOOR AND CEILING. REMOVE ALL EXISTING WINDOWS.
19. REMOVE 1X4 BOARDS LOCATED ON THE UNDERSIDE OF BALCONIES IF PRESENT. PATCH REMAINING HOLES.
20. REMOVE CEILING MOUNTED MONITORING DEVICE LOCATED IN APARTMENTS. PATCH AND REPAIR CEILING TO MATCH EXISTING ADJACENT MATERIALS AND FINISHES
21. REMOVE EXISTING ALUMINUM HANDRAIL ON FLOORS 2 THRU 8, MODIFY, POWDER COAT AND REINSTALL OVER CONTINUOUS TRIM BOARD AS SHOWN ON DETAIL 13/A-701 & 14/A-701.
22. PC TO REMOVE EXISTING HOT WATER HEATER IN APARTMENTS & PREPARE FOR NEW DOMESTIC HOT WATER SYSTEM.
23. PC TO REMOVE EXISTING SHOWER HEADS AND PREPARE FOR NEW SHOWER HEAD.
24. GC TO REMOVE EXISTING DOOR & RELATED HARDWARE. LEAVE EXISTING TIMELY DOOR FRAME TO BE CLEANED AND PAINTED
25. EC TO DISCONNECT AND REMOVE LIGHT SWITCH TO BE RELOCATED
26. EC TO DISCONNECT AND REMOVE RECEPTACLE TO BE RELOCATED
27. EC TO CAREFULLY REMOVE LIGHT FIXTURE TO REUSE WITH NEW CEILING TILE AND GRID .
28. GC TO REMOVE EXISTING CAULKING FROM ALL JOINTS AT EIFS WITHOUT DAMAGING MESH. IF MESH IS DAMACED MUST REPAIR AT OWN EXPENSE. CLEAN & PREPARE FOR NEW WORK.
29. GC TO REMOVE EXISTING DOOR, FRAME & RELATED HARDWARE
30. GC TO REMOVE EXISTING PANIC HARDWARE FROM ALUMINUM STOREFRONT DOOR & PREPARE FOR NEW WORK.
31. GC TO REMOVE PORTION OF EXISTING PARTITION WALL TO ALLOW FOR INSTALLATION OF DOOR & FRAME. REFER TO FLOOR PLAN FOR DOOR LOCATION & SIZE.
32. GC TO REMOVE EIFS PANEL TO NEAREST EXPANSION JOINT. CLEAN & PREPARE FOR NEW EIFS.
33. GC TO REMOVE EXISTING LETTERING FROM EXTERIOR BUILDING WALL. PROVIDE SEAMLESS PATCH, REPAIR & SEAL OF EXISTING CONDITIONS. MATCH EXISTING ADJACENT MATERIALS.
34. MC TO REMOVE EXISTING EXHAUST GRILL. LIMIT DISTURBANCE AND DAMAGE TO CEILING. PATCH OPENING TO MATCH EXISTING ADJACENT CONDITIONS.
35. GC TO REMOVE EXISTING SHOWER ROD AND PREPARE FOR NEW WORK.
36. EC TO DISCONNECT & REMOVE EMERGENCY CALL STATION TO BE RELOCATED.
37. GC TO REMOVE PORTION OF EXISTING WALL PARTITION FROM FLOOR TO CEILING/BULKHEAD. REMOVE PORTION OF GWB TO NEAREST EXISTING STUD BEYOND THE 50½" REQUIRED REMOVAL. LIMIT DISTURBANCE AND DAMAGE TO ADJACENT WALLS, FLOOR & CEILING. PREPARE EXISTING FRAMING FOR NEW WORK.
38. REMOVE AND REPAINT EXISTING METAL SHELVING AND RELATED HARDWARE BEFORE REINSTALLING

LEGEND

ROOM NAME → KITCHEN; 01 = FLOOR LEVEL, UNIT NUMBER	
1	NUMBERED DEMOLITION NOTE
	NUMBERED GENERAL CONSTRUCTION NOTE
O.H.	OPPOSITE HAND
VIEW NUMBER / SHEET NUMBER	

GENERAL DEMOLITION NOTES

1. ALL DEMOLITION DEBRIS, WASTE MATERIAL, EXCESS FILL, TREES, LIMBS, ROOTS, RUBBISH, AND TRASH IS TO BE CONTAINERIZED ON SITE AS GENERATED.
2. THE GENERAL CONTRACTOR SHALL PROVIDE AND MAINTAIN ROLL-OFF BOX(ES) AND/OR DUMPSTER(S).
3. THE GENERAL CONTRACTOR SHALL IMMEDIATELY REMOVE FROM THE SITE, TRANSPORT AND DISPOSE AT AN APPROVED OFF SITE DISPOSAL FACILITY, ALL ROLL-OFF BOX(ES) AND/OR DUMPSTER(S) WHEN FULL. THIS MAY INCLUDE BUT NOT BE LIMITED TO BUILDING DEMOLITION DEBRIS.
4. THE OWNER SHALL BE GIVEN THE OPPORTUNITY TO COLLECT AND RETAIN AT THEIR FACILITY ANY ITEMS TO BE REMOVED ON THIS PROJECT. THIS MAY INCLUDE BUT NOT BE LIMITED TO DOORS, PLUMBING FIXTURES, LIGHT FIXTURES, ETC. CONTRACTOR(S) SHALL COORDINATE DEMOLITION WORK WITH, AND NOTIFY THE OWNER, PRIOR TO REMOVAL OF ITEMS FROM SITE.
5. EXAMINE EXISTING CONDITIONS PRIOR TO COMMENCEMENT OF WORK, INCLUDING, BUT NOT LIMITED TO, ELEMENTS SUBJECT TO DAMAGE OR MOVEMENT DURING CUTTING AND PATCHING.
6. FURNISH PROTECTION FROM ELEMENTS FOR AREAS WHICH MAY BE EXPOSED BY UNCOVERING WORK.
7. PRIME CONTRACTORS ARE RESPONSIBLE FOR CUTTING & PATCHING ANY AREAS OF EXISTING WALLS, FLOORS OR CEILINGS THAT IS REQUIRED FOR THEIR WORK. PRIME CONTRACTORS ARE ALSO RESPONSIBLE FOR REPAIRING PORTIONS OF EXISTING SURFACES WHICH ARE DAMAGED DURING THEIR DEMOLITION WORK.
8. PROVIDE TEMPORARY SUPPORT TO ENSURE STRUCTURAL INTEGRITY OF THE WORK. PROVIDE DEVICES AND METHODS TO PROTECT OTHER PORTIONS OF PROJECT FROM DAMAGE. PROVIDE TEMPORARY, SAFE FLOORING IN AREAS OF WORK.
9. GENERAL CONTRACTOR IS RESPONSIBLE FOR ALL DEMOLITION UNLESS SPECIFICALLY INDICATED TO BE COMPLETED BY HVAC, PLUMBING OR ELECTRICAL CONTRACTORS. HVAC, PLUMBING AND ELECTRICAL CONTRACTORS ARE RESPONSIBLE FOR DEMOLITION OF ALL WORK WITHIN THEIR DISCIPLINE.
10. REFER TO ENLARGED DEMOLITION PLANS FOR SPECIFIC DEMOLITION IN THE APARTMENTS.
11. REFER TO DEMOLITION ELEVATION PLANS FOR SPECIFIC DEMOLITION ON THE EXTERIOR OF THE BUILDING

GENERAL NOTES

1. FIELD VERIFY ALL EXISTING CONDITIONS INCLUDING, BUT NOT LIMITED TO: DIMENSIONS, LOCATIONS OF PLUMBING LINES AND FIXTURES, ELECTRIC LINES AND FIXTURES AND HVAC EQUIPMENT. CONTRACTORS ARE RESPONSIBLE FOR REVIEWING THE COMPLETE SET OF CONSTRUCTION DOCUMENTS AND FIELD CONDITIONS TO DETERMINE THE FULL SCOPE OF WORK REQUIRED.
2. DRAWINGS ARE THE GRAPHIC AND PICTORIAL PORTIONS OF THE CONTRACT DOCUMENTS SHOWING THE DESIGN, LOCATION AND DIMENSIONS OF THE WORK. CONTRACTORS ARE TO REFER TO THE SPECIFICATIONS FOR THE WRITTEN REQUIREMENTS FOR MATERIALS, EQUIPMENT, CONSTRUCTION SYSTEMS, STANDARDS FOR WORKMANSHIP OF THE WORK, AND PERFORMANCE OF RELATED SERVICES.
3. THE INTENT OF THE CONTRACT DOCUMENTS IS TO INCLUDE ALL ITEMS NECESSARY FOR THE PROPER EXECUTION AND COMPLETION OF THE WORK BY THE CONTRACTORS. THE CONTRACT DOCUMENTS ARE COMPLIMENTARY, AND WHAT IS REQUIRED BY ONE SHALL BE BINDING AS IF REQUIRED BY ALL.
4. DO NOT SCALE DRAWINGS.
5. ALL INTERIOR DIMENSIONS INDICATED ARE TO THE FINISHED FACE OF GWB.
6. ALL ITEMS NOTED ON DRAWINGS ARE NEW UNLESS SPECIFICALLY NOTED AS EXISTING OR NOT IN CONTRACT (N.I.C.).
7. REFER TO CIVIL DRAWINGS FOR CONTINUATION OF SIDEWALKS AND EXTENTS OF SITEWORK.
8. AT AREAS OF DEMOLITION INCLUDING, BUT NOT LIMITED TO REMOVAL OF WALL, SIGN, WALL MOUNTED FIXTURE, ROOF VENT, ETC., PROVIDE SEAMLESS PATCH, REPAIR AND SEAL OF EXISTING CONDITIONS. MATCH EXISTING ADJACENT MATERIALS.
9. DOORS IN NEW PARTITIONS SHOULD BE CENTERED ON WALL OR 2" FROM ADJACENT WALL AT DOOR HINGE.
10. FOR DOOR HEAD & JAMB DETAILS, REFER TO SHEET A-801.
11. IN ALL CASES, PROVIDE MEANS TO FURNISH AND INSTALL.
12. GC IS RESPONSIBLE FOR PATCHING AND FINISHING ALL WALLS, FLOORS AND CEILINGS WHERE DEMOLITION HAS OCCURRED. PATCHING AND FINISHES ARE TO MATCH ADJACENT FINISHES.
13. GC IS TO COMPLETE WORK IN ONE (1) KITCHEN OF EACH TYPE AS A MOCK-UP,, APPROVED BY ARCHITECT AND OWNER, BEFORE PROCEEDING WITH WORK IN OTHER APARTMENTS.

BATHROOM ACCESSORY SCHEDULE

ITEM NUMBER	DESCRIPTION	MANUFACTURER	MODEL NUMBER	REMARKS
1	36" GRAB BAR	A.J. WASHROOM ACCESSORIES	-----	1-1/2" TYPE 304 STAINLESS STEEL 18 GUAGE
2	42" GRAB BAR	A.J. WASHROOM ACCESSORIES	-----	1-1/2" TYPE 304 STAINLESS STEEL 18 GUAGE
3	TOWEL RING (TR)	BRADLEY	9334	
4	24" TOWEL BAR (TB)	BRADLEY	9054	
5	SURFACE MTD. TOILET PAPER HOLDER (TP)	BRADLEY	5085	
6	CURVED SHOWER ROD	BRADLEY	9530	

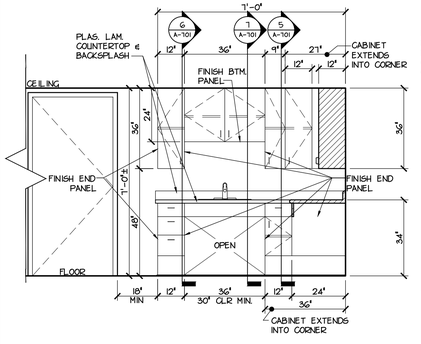

3 A-603 ELEVATION

SCALE: 3/8" = 1'-0"

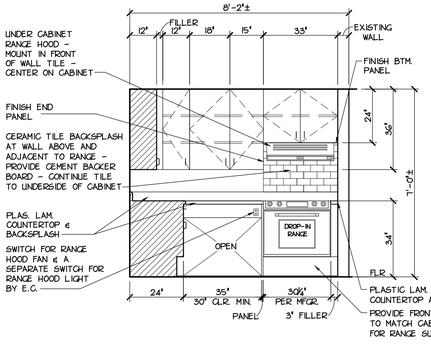

4 A-603 ELEVATION

SCALE: 3/8" = 1'-0"

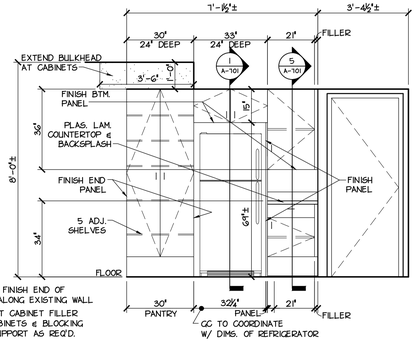

5 A-603 ELEVATION

SCALE: 3/8" = 1'-0"

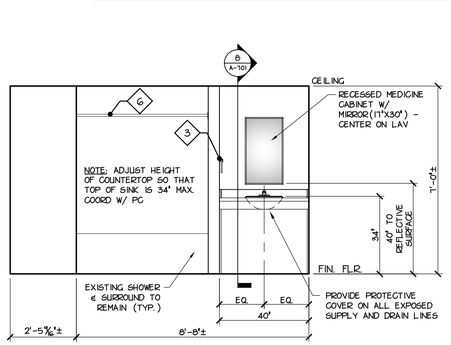

6 A-603 ELEVATION

SCALE: 3/8" = 1'-0"

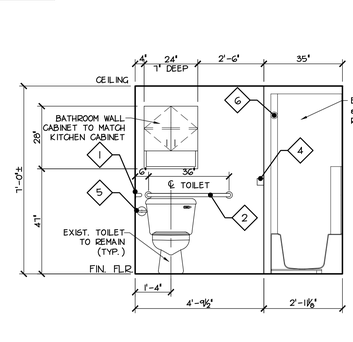

7 A-603 ELEVATION

SCALE: 3/8" = 1'-0"

RW SLEIGHTER
ENGINEERS & ARCHITECTS
1060 EBERLY WAY
LEMONT FURNACE, PA 15456
Phone 724.438.4010
Fax 724.438.4017
info@rwsleighter.com
WWW.RWSLEIGHTER.COM

CONFIDENTIAL - ALL RIGHTS RESERVED

SEAL

REGISTERED ARCHITECT COMMONWEALTH OF PENNSYLVANIA

PROJECT: **LOYALHANNA APARTMENT RENOVATIONS**
1111 JEFFERSON STREET
LATROBE, PENNSYLVANIA 15650

OWNER: **WESTMORELAND COUNTY HOUSING AUTHORITY**
167 SOUTH GREENGATE ROAD
GREENSBURG, PENNSYLVANIA 15601

REVISION

NO.	DATE	DESCRIPTION

DATE: MAY 6, 2019 | PROJECT NUMBER: R17-077-04

DESIGNED	DRAWN	CHECKED
----	----	----

SHEET NAME: **ENLARGED APARTMENT PLAN - UFAS APARTMENT**

SHEET NUMBER: **A-603**

P:\077 - Westmoreland County Housing Authority\R17-077-04 - WCHA Loyalhanna\Dwg\Sheets\A-603.dwg, Date: 5/3/2019 4:06:08 PM, Plotted By: SEAN KEIFFER

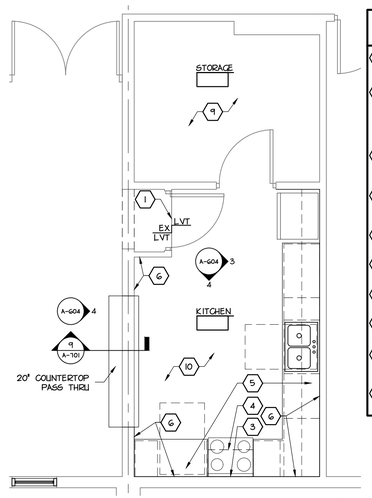

1 A-604 ENLARGED FLOOR PLAN

SCALE: 1/4" = 1'-0"

PLAN NORTH

NUMBERED NOTES

1. GC TO PROVIDE TRANSITION STRIP AS REQUIRED FOR TRANSITION BETWEEN FLOORING TYPES TO ALIGN WITH INSIDE FACE OF EXISTING DOR JAMB.
2. GC TO PROVIDE 3-⅝" METAL STUD WITH ⅝" GWB ON EACH SIDE WITH SOUND BATT INSULATION WITHIN AT NEW WALL PARTITION. RUN METAL STUDS TO UNDERSIDE OF STRUCTURE. PROVIDE OPENING OF APPROPRIATE SIZE FOR NEW WOOD DOOR & TIMELY DOOR FRAME. (SIZE INDICATED ON DOOR SCHEDULE.)
3. GC TO PROVIDE CERAMIC TILE BACKSPLASH AT WALL ABOVE RANGE (AND WALL ADJACENT TO RANGE IN ADA UNIT.) GROUT TILE AND GROUT GAP BETWEEN RANGE HOOD AND CERAMIC TILE. PROVIDE CEMENT BACKER BOARD
4. GC TO PROVIDE & INSTALL RANGE HOOD. CONNECT TO EXISTING EXHAUST FLUE. PROVIDE NEW DUCT WORK AS REQUIRED TO ENSURE LEAK PROOF SYSTEM.
5. GC TO PATCH & REPAIR AREA OF REMOVED ACT & GRID BULKHEAD. MATCH EXISTING ADJACENT MATERIALS TO ENSURE SEAMLESS TRANSITION.
6. GC TO PATCH & REPAIR WALLS/CEILINGS AT LOCATIONS OF REMOVED CABINETS. CEILINGS & WALLS TO MATCH EXISTING CONDITIONS.
7. PATCH & REPAIR AREA OF WALL MOUNTED LIGHT FIXTURES. MATCH EXISTING ADJACENT MATERIALS TO ENSURE SEAMLESS TRANSITION.
8. GC TO INSTALL LARGE 30" X 36" KICKPLATE ON EXISTING UNIT ENTRANCE DOORS. DOOR AND FRAME TO BE PAINTED
9. GC TO PROVIDE & INSTALL NEW CEILING GRID AND CEILING TILE TO MATCH EXISTING NEWER METAL CEILING TILE AND GRID LOCATED ON THE FIRST FLOOR.
10. GC TO PROVIDE & INSTALL NEW CEILING GRID AND PLASTIC COATED ACOUSTIC CEILING TILE IN COMMUNITY ROOM KITCHEN

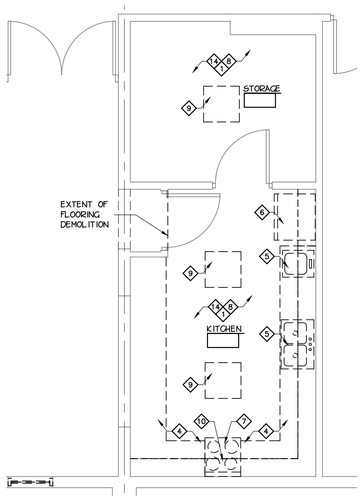

2 A-604 ENLARGED DEMOLITION PLAN

SCALE: 1/4" = 1'-0"

NUMBERED DEMOLITION NOTES

1. GC TO REMOVE FLOORING, INCLUDING BASE. REMOVE ALL GLUES AND RESIDUE. PREP SUBSTRATE FOR NEW FLOORING IN ACCORDANCE WITH FLOORING MANUFACTURER'S REQUIREMENTS.
2. GC TO REMOVE EXISTING WALL PARTITION ENTIRELY FROM FLOOR TO CEILING/BULKHEAD. LIMIT DISTURBANCE AND DAMAGE TO ADJACENT WALLS, FLOOR & CEILING. PATCH EXISTING WALLS, FLOOR AND CEILING.
3. GC TO REMOVE EXISTING DOORS, FRAMES AND RELATED HARDWARE. LIMIT DISTURBANCE AND DAMAGE TO ADJACENT WALLS, FLOOR AND CEILING. PATCH EXISTING WALLS FLOOR AND CEILING.
4. GC TO REMOVE KITCHEN CABINETS AND COUNTERTOPS INCLUDING PANTRY CABINETS (PANTRY CABINETS LOCATED IN FOUR EXISTING ADA UNITS ONLY.) LIMIT DISTURBANCE AND DAMAGE TO ADJACENT WALLS, FLOOR & CEILING. PATCH EXISTING WALLS, FLOOR AND CEILING.
5. GC TO REMOVE SINK. PC TO DISCONNECT PLUMBING LINES AND TEMPORARILY CAP FOR NEW WORK. LIMIT DISTURBANCE AND DAMAGE TO ADJACENT WALLS, FLOOR & CEILING. GC TO PATCH EXISTING WALLS, FLOOR AND CEILING.
6. GC TO DISCONNECT AND REMOVE ALL REFRIGERATORS. REFRIGERATORS ARE TO BE TEMPORARILY STORED WITHIN APARTMENT UNIT OR TURNED OVER TO OWNER.
7. GC TO REMOVE EXISTING RANGE AND TURN-OVER TO OWNER..
8. EC TO DISCONNECT AND REMOVE RECEPTACLES AND LIGHT SWITCHES ALONG WITH COVER PLATE THROUGHOUT APARTMENT. PREPARE FOR NEW RECEPTACLES, SWITCHES & COVER PLATES
9. EC TO DISCONNECT AND REMOVE LIGHT FIXTURES. REWORK WIRING FOR NEW LIGHT FIXTURES AS INDICATED AS PART OF NEW WORK ON E-101. LIMIT DISTURBANCE AND DAMAGE TO ADJACENT WALLS, FLOOR & CEILING. GC TO PATCH EXISTING WALLS, FLOOR AND CEILING.
10. EC TO DISCONNECT & REMOVE VENT HOOD.
11. GC TO REMOVE EXISTING WALL MOUNTED MIRROR. LIMIT DISTURBANCE AND DAMAGE TO WALLS. PATCH WALLS TO MATCH EXISTING CONDITIONS AS PART OF NEW WORK.
12. GC TO REMOVE SHELVES, RODS AND RELATED HARDWARE FROM CLOSETS AS INDICATED. LIMIT DISTURBANCE AND DAMAGE TO WALLS. PATCH EXISTING WALLS TO MATCH EXISTING FINISH.
13. EC TO DISCONNECT (BACK TO PANEL) AND REMOVE LIGHT SWITCH.
14. GC TO REMOVE EXISTING CEILING TILE, GRID AND RELATED HANGERS. LIMIT DISTURBANCE AND DAMAGE TO WALLS. (FIRST FLOOR ONLY)
15. EXISTING TOILET TO BE REUSED. PC TO REMOVE ALL CAULKING FROM BASE AND CLEAN PRIOR TO REINSTALLATION
16. REMOVE EXISTING ACCORDION DOORS & PREPARE FOR NEW WORK
17. REMOVE EXISTING SLIDING GLASS DOORS, FRAMES AND ALL RELATED HARDWARE. (FLRS 2-8) LIMIT DISTURBANCE AND DAMAGE TO ADJACENT WALLS, FLOOR AND CEILING. PATCH EXISTING WALLS, FLOOR AND CEILING.
18. REMOVE EXISTING WINDOW, FRAME AND RELATED HARDWARE. LIMIT DISTURBANCE AND DAMAGE TO ADJACENT WALLS, FLOOR AND CEILING. PATCH EXISTING WALLS, FLOOR AND CEILING. REMOVE ALL EXISTING WINDOWS.
19. REMOVE 1X4 BOARDS LOCATED ON THE UNDERSIDE OF BALCONIES IF PRESENT. PATCH REMAINING HOLES.
20. REMOVE CEILING MOUNTED MONITORING DEVICE LOCATED IN APARTMENTS. PATCH AND REPAIR CEILING TO MATCH EXISTING ADJACENT MATERIALS AND FINISHES
21. REMOVE EXISTING ALUMINUM HANDRAIL ON FLOORS 2 THRU 8, MODIFY, POWDER COAT AND REINSTALL OVER CONTINUOUS TRIM BOARD AS SHOWN ON DETAIL 13/A-101 & 14/A-101.
22. PC TO REMOVE EXISTING HOT WATER HEATER IN APARTMENTS & PREPARE FOR NEW DOMESTIC HOT WATER SYSTEM.
23. PC TO REMOVE EXISTING SHOWER HEADS AND PREPARE FOR NEW SHOWER HEAD.
24. GC TO REMOVE EXISTING DOOR & RELATED HARDWARE. LEAVE EXISTING TIMELY DOOR FRAME TO BE CLEANED AND PAINTED
25. EC TO DISCONNECT AND REMOVE LIGHT SWITCH TO BE RELOCATED
26. EC TO DISCONNECT AND REMOVE RECEPTACLE TO BE RELOCATED
27. EC TO CAREFULLY REMOVE LIGHT FIXTURE TO REUSE WITH NEW CEILING TILE AND GRID .
28. GC TO REMOVE EXISTING CAULKING FROM ALL JOINTS AT EIFS WITHOUT DAMAGING MESH. IF MESH IS DAMAGED MUST REPAIR AT OWN EXPENSE. CLEAN & PREPARE FOR NEW WORK.
29. GC TO REMOVE EXISTING DOOR, FRAME & RELATED HARDWARE
30. GC TO REMOVE EXISTING PANIC HARDWARE FROM ALUMINUM STOREFRONT DOOR & PREPARE FOR NEW WORK.
31. GC TO REMOVE PORTION OF EXISTING PARTITION WALL TO ALLOW FOR INSTALLATION OF DOOR & FRAME. REFER TO FLOOR PLAN FOR DOOR LOCATION & SIZE.
32. GC TO REMOVE EIFS PANEL TO NEAREST EXPANSION JOINT. CLEAN & PREPARE FOR NEW EIFS.
33. GC TO REMOVE EXISTING LETTERING FROM EXTERIOR BUILDING WALL. PROVIDE SEAMLESS PATCH, REPAIR & SEAL OF EXISTING CONDITIONS. MATCH EXISTING ADJACENT MATERIALS.
34. MC TO REMOVE EXISTING EXHAUST GRILL. LIMIT DISTURBANCE AND DAMAGE TO CEILING. PATCH OPENING TO MATCH EXISTING ADJACENT CONDITIONS.
35. GC TO REMOVE EXISTING SHOWER ROD AND PREPARE FOR NEW WORK

LEGEND

ROOM NAME — KITCHEN; 109 — UNIT NUMBER; FLOOR LEVEL	
1	NUMBERED DEMOLITION NOTE
	NUMBERED GENERAL CONSTRUCTION NOTE
O.H.	OPPOSITE HAND
4 / A-604	VIEW NUMBER / SHEET NUMBER

GENERAL DEMOLITION NOTES

1. ALL DEMOLITION DEBRIS, WASTE MATERIAL, EXCESS FILL, TREES, LIMBS, ROOTS, RUBBISH, AND TRASH IS TO BE CONTAINERIZED ON SITE AS GENERATED.
2. THE GENERAL CONTRACTOR SHALL PROVIDE AND MAINTAIN ROLL-OFF BOX(ES) AND/OR DUMPSTER(S).
3. THE GENERAL CONTRACTOR SHALL IMMEDIATELY REMOVE FROM THE SITE, TRANSPORT AND DISPOSE AT AN APPROVED OFF SITE DISPOSAL FACILITY, ALL ROLL-OFF BOX(ES) AND/OR DUMPSTER(S) WHEN FULL. THIS MAY INCLUDE BUT NOT BE LIMITED TO BUILDING DEMOLITION DEBRIS.
4. THE OWNER SHALL BE GIVEN THE OPPORTUNITY TO COLLECT AND RETAIN AT THEIR FACILITY ANY ITEMS TO BE REMOVED ON THIS PROJECT. THIS MAY INCLUDE BUT NOT BE LIMITED TO DOORS, PLUMBING FIXTURES, LIGHT FIXTURES, ETC. CONTRACTOR(S) SHALL COORDINATE DEMOLITION WORK WITH, AND NOTIFY THE OWNER, PRIOR TO REMOVAL OF ITEMS FROM SITE.
5. EXAMINE EXISTING CONDITIONS PRIOR TO COMMENCEMENT OF WORK, INCLUDING, BUT NOT LIMITED TO, ELEMENTS SUBJECT TO DAMAGE OR MOVEMENT DURING CUTTING AND PATCHING.
6. FURNISH PROTECTION FROM ELEMENTS FOR AREAS WHICH MAY BE EXPOSED BY UNCOVERING WORK.
7. PRIME CONTRACTORS ARE RESPONSIBLE FOR CUTTING & PATCHING ANY AREAS OF EXISTING WALLS, FLOORS OR CEILINGS THAT IS REQUIRED FOR THEIR WORK. PRIME CONTRACTORS ARE ALSO RESPONSIBLE FOR REPAIRING PORTIONS OF EXISTING SURFACES WHICH ARE DAMAGED DURING THEIR DEMOLITION WORK.
8. PROVIDE TEMPORARY SUPPORT TO ENSURE STRUCTURAL INTEGRITY OF THE WORK. PROVIDE DEVICES AND METHODS TO PROTECT OTHER PORTIONS OF PROJECT FROM DAMAGE. PROVIDE TEMPORARY, SAFE FLOORING IN AREAS OF WORK.
9. GENERAL CONTRACTOR IS RESPONSIBLE FOR ALL DEMOLITION UNLESS SPECIFICALLY INDICATED TO BE COMPLETED BY HVAC, PLUMBING OR ELECTRICAL CONTRACTORS. HVAC, PLUMBING AND ELECTRICAL CONTRACTORS ARE RESPONSIBLE FOR DEMOLITION OF ALL WORK WITHIN THEIR DISCIPLINE.
10. REFER TO ENLARGED DEMOLITION PLANS FOR SPECIFIC DEMOLITION IN THE APARTMENTS.
11. REFER TO DEMOLITION ELEVATION PLANS FOR SPECIFIC DEMOLITION ON THE EXTERIOR OF THE BUILDING

GENERAL NOTES

1. FIELD VERIFY ALL EXISTING CONDITIONS INCLUDING, BUT NOT LIMITED TO: DIMENSIONS, LOCATIONS OF PLUMBING LINES AND FIXTURES, ELECTRIC LINES AND FIXTURES AND HVAC EQUIPMENT. CONTRACTORS ARE RESPONSIBLE FOR REVIEWING THE COMPLETE SET OF CONSTRUCTION DOCUMENTS AND FIELD CONDITIONS TO DETERMINE THE FULL SCOPE OF WORK REQUIRED.
2. DRAWINGS ARE THE GRAPHIC AND PICTORIAL PORTIONS OF THE CONTRACT DOCUMENTS SHOWING THE DESIGN, LOCATION AND DIMENSIONS OF THE WORK. CONTRACTORS ARE TO REFER TO THE SPECIFICATIONS FOR THE WRITTEN REQUIREMENTS FOR MATERIALS, EQUIPMENT, CONSTRUCTION SYSTEMS, STANDARDS FOR WORKMANSHIP OF THE WORK, AND PERFORMANCE OF RELATED SERVICES.
3. THE INTENT OF THE CONTRACT DOCUMENTS IS TO INCLUDE ALL ITEMS NECESSARY FOR THE PROPER EXECUTION AND COMPLETION OF THE WORK BY THE CONTRACTORS. THE CONTRACT DOCUMENTS ARE COMPLIMENTARY, AND WHAT IS REQUIRED BY ONE SHALL BE BINDING AS IF REQUIRED BY ALL.
4. DO NOT SCALE DRAWINGS.
5. ALL INTERIOR DIMENSIONS INDICATED ARE TO THE FINISHED FACE OF GWB.
6. ALL ITEMS NOTED ON DRAWINGS ARE NEW UNLESS SPECIFICALLY NOTED AS EXISTING OR NOT IN CONTRACT (N.I.C.).
7. REFER TO CIVIL DRAWINGS FOR CONTINUATION OF SIDEWALKS AND EXTENTS OF SITEWORK.
8. AT AREAS OF DEMOLITION INCLUDING, BUT NOT LIMITED TO REMOVAL OF WALL, SIGN, WALL MOUNTED FIXTURE, ROOF VENT, ETC., PROVIDE SEAMLESS PATCH, REPAIR AND SEAL OF EXISTING CONDITIONS. MATCH EXISTING ADJACENT MATERIALS.
9. DOORS IN NEW PARTITIONS SHOULD BE CENTERED ON WALL OR 2" FROM ADJACENT WALL AT DOOR HINGE.
10. FOR DOOR HEAD & JAMB DETAILS, REFER TO SHEET A-801.
11. IN ALL CASES, PROVIDE MEANS TO FURNISH AND INSTALL.
12. GC IS RESPONSIBLE FOR PATCHING AND FINISHING ALL WALLS, FLOORS AND CEILINGS WHERE DEMOLITION HAS OCCURRED. PATCHING AND FINISHES ARE TO MATCH ADJACENT FINISHES.
13. GC IS TO COMPLETE WORK IN ONE (1) KITCHEN OF EACH TYPE AS A MOCK-UP., APPROVED BY ARCHITECT AND OWNER, BEFORE PROCEEDING WITH WORK IN OTHER APARTMENTS.

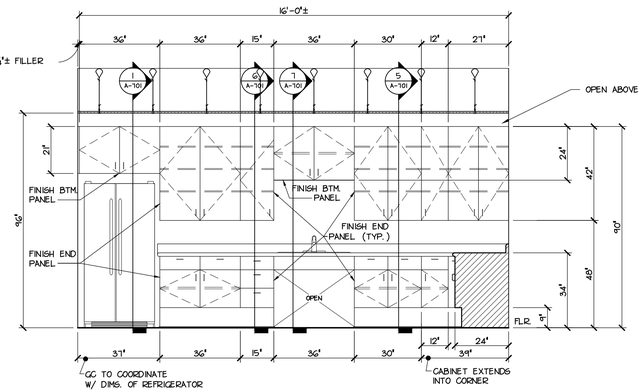

3 A-604 COMMUNITY KITCHEN ELEVATION

SCALE: 3/8" = 1'-0"

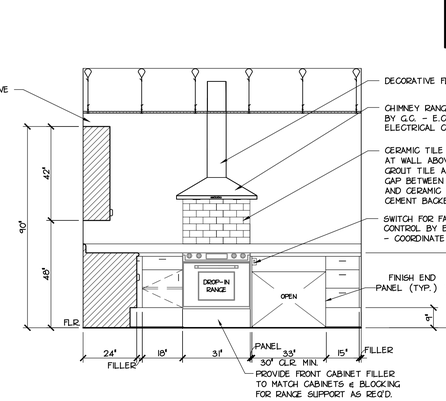

4 A-604 COMMUNITY KITCHEN ELEVATION

SCALE: 3/8" = 1'-0"

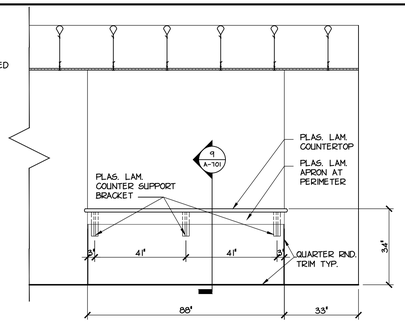

5 A-604 PASS THRU ELEVATION

SCALE: 3/8" = 1'-0"

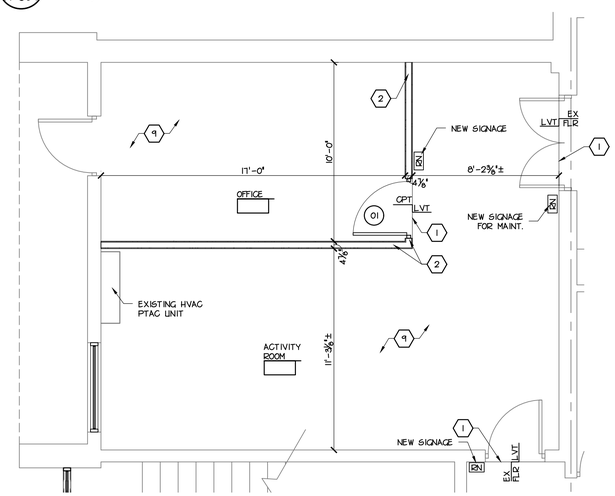

6 A-604 ENLARGED FLOOR PLAN

SCALE: 1/4" = 1'-0"

PLAN NORTH

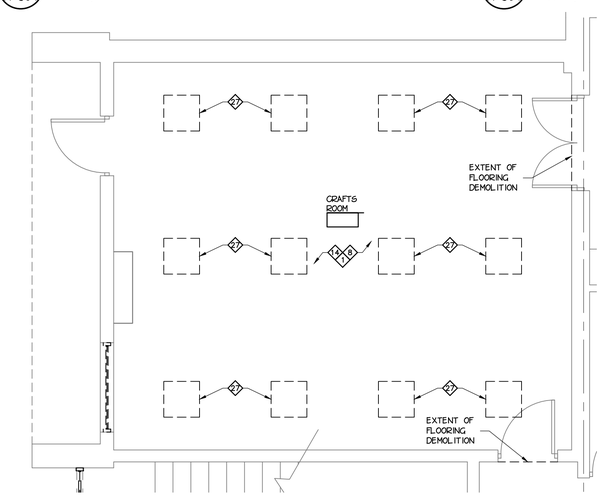

7 A-604 ENLARGED DEMOLITION PLAN

SCALE: 1/4" = 1'-0"

PLAN NORTH

FIRST FLOOR COMMUNITY SPACES

ROOM FINISH SCHEDULE

MATERIAL: B. VINYL COMPOSITION TILE; C. CARPET TILE; D. RUBBER; G. DRYWALL; H. ACOUSTIC TILE; J. EXISTING TO REMAIN; L. LUXURY VINYL TILE

FINISHES: 1. PRE-FINISHED; 2. PAINTED

REMARKS: 1. MATCH EXISTING CEILING HEIGHT; 2. ACOUSTIC CEILING TILE TO BE PLASTIC COATED; 3. ACOUSTIC CEILING TILE TO MATCH EXISTING METAL TILE ON FIRST FLOOR ONLY

ROOM NUMBER	ROOM NAME	FLOOR MATERIAL	FLOOR FINISH	FLOOR COLOR	BASE MATERIAL	BASE FINISH	BASE COLOR	WALLS NORTH MATERIAL	WALLS NORTH FINISH	WALLS NORTH COLOR	WALLS SOUTH MATERIAL	WALLS SOUTH FINISH	WALLS SOUTH COLOR	WALLS EAST MATERIAL	WALLS EAST FINISH	WALLS EAST COLOR	WALLS WEST MATERIAL	WALLS WEST FINISH	WALLS WEST COLOR	WALLS W/SCT MATERIAL	WALLS W/SCT FINISH	WALLS W/SCT COLOR	CEILING MATERIAL	CEILING FINISH	CEILING COLOR	CEILING HEIGHT	REMARKS
	KITCHEN	F	1	-	D	1	-	J	2	-	J	2	-	J	2	-	J	2	-	-	-	-	H	1	-	EX	1,2
	STORAGE	F	1	-	D	1	-	J	2	-	J	2	-	J	2	-	J	2	-	-	-	-	H	1	-	EX	1,2
	ACTIVITY ROOM	F	1	-	D	1	-	G	2	-	J	2	-	J	2	-	G	2	-	-	-	-	H	1	-	EX	1,3
	OFFICE	C	1	-	D	1	-	J	2	-	G	2	-	G	2	-	J	2	-	-	-	-	H	1	-	EX	1,3

DOOR SCHEDULE

DOOR NUMBER	LABEL	SIZE WIDTH X HT.	TYPE	DOOR MATERIAL	FRAME MATERIAL	FRAME SILL DETAILS	FRAME JAMB DETAILS	FRAME HEAD DETAILS	HW SET NUMBER	GENERAL REMARKS
01		3'-0" X 6'-8"	A	W	1	-	-	-	05	MATERIALS: W. WOOD; H. HOLLOW METAL; J. EXISTING TO REMAIN. LABEL: A 3-HR; B 1.5-HR; C 1 HR; D 20 MIN.; E 2-HR. REMARKS: 1-3/8" SOLID CORE FLUSH WOOD DOOR

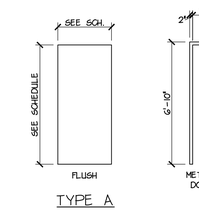

8 A-604 DOOR & FRAME TYPES

SCALE: 1/4" = 1'-0"

RW SLEIGHTER
ENGINEERS & ARCHITECTS
1060 EBERLY WAY
LEMONT FURNACE, PA 15456
Phone 724.438.4010
Fax 724.438.4017
info@rwsleighter.com
WWW.RWSLEIGHTER.COM

CONFIDENTIAL - ALL RIGHTS RESERVED

SEAL

REGISTERED ARCHITECT COMMONWEALTH OF PENNSYLVANIA

PROJECT: LOYALHANNA APARTMENT RENOVATIONS
1111 JEFFERSON STREET
LATROBE, PENNSYLVANIA 15650

OWNER: WESTMORELAND COUNTY HOUSING AUTHORITY
167 SOUTH GREENGATE ROAD
GREENSBURG, PENNSYLVANIA 15601

REVISION

NO.	DATE	DESCRIPTION

DATE	PROJECT NUMBER
MAY 6, 2019	R17-077-04

DESIGNED	DRAWN	CHECKED
----	----	----

SHEET NAME: ENLARGED FIRST FLOOR PLANS

SHEET NUMBER: A-604

P:\077 - Westmoreland County Housing Authority\R17-077-04 - WCHA Loyalhanna\Dwg\Sheets\A-604.dwg, Date: 5/8/2019 4:00:42 PM, Plotted By: SEAN KEFFER

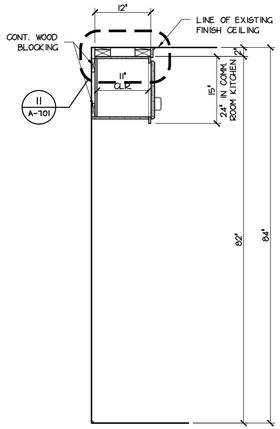

1 SECTION
A-701 SCALE: 3/4" = 1'-0"

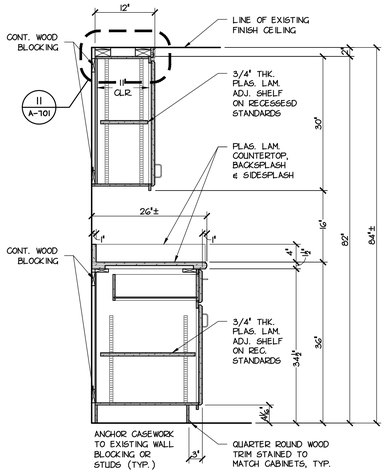

2 SECTION
A-701 SCALE: 3/4" = 1'-0"

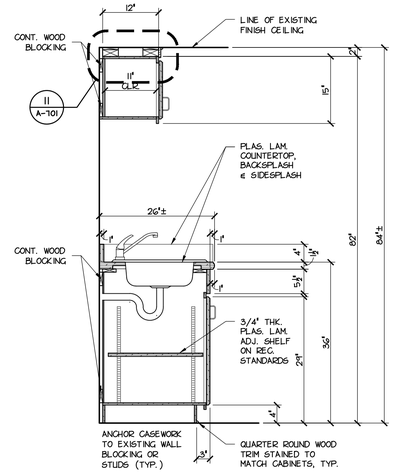

3 SECTION
A-701 SCALE: 3/4" = 1'-0"

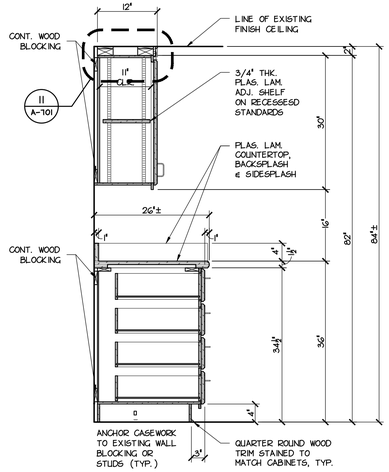

4 SECTION
A-701 SCALE: 3/4" = 1'-0"

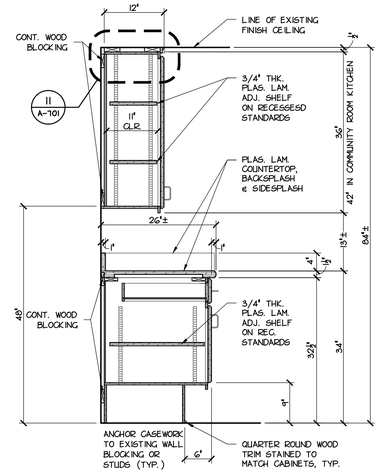

5 SECTION
A-701 SCALE: 3/4" = 1'-0"

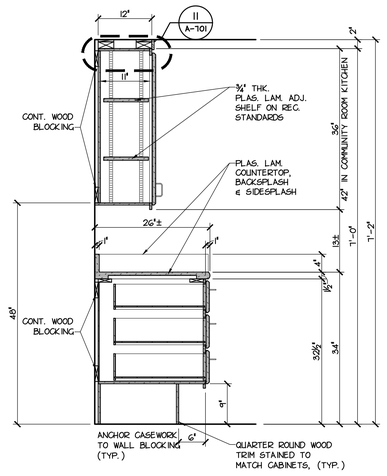

6 SECTION
A-701 SCALE: 3/4" = 1'-0"

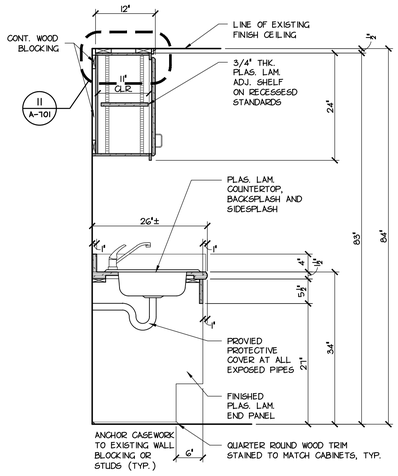

7 SECTION
A-701 SCALE: 3/4" = 1'-0"

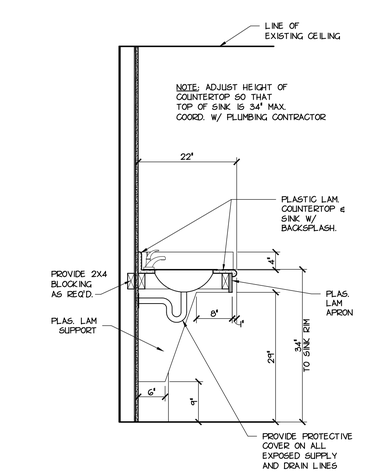

8 SECTION
A-701 SCALE: 3/4" = 1'-0"

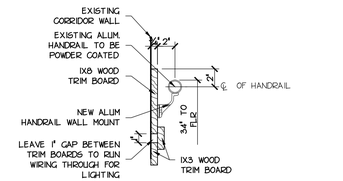

13 HANDRAIL DETAIL
A-701 SCALE: 1 1/2" = 1'-0"

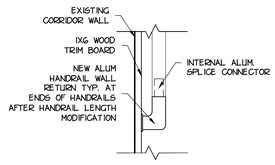

14 HANDRAIL WALL RETURN
A-701 SCALE: 1 1/2" = 1'-0"

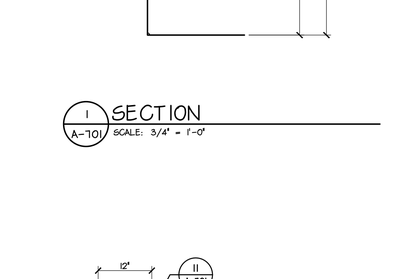

9 PASS THRU
A-701 SCALE: 3/4" = 1'-0"

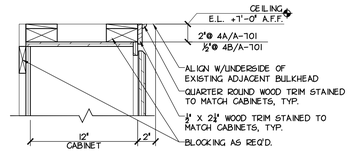

11 HEAD/TRIM DETAIL
A-701 SCALE: 1 1/2" = 1'-0"

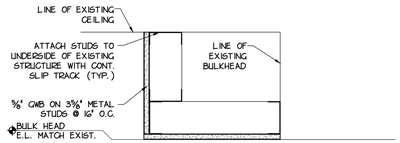

12 BULKHEAD DETAIL
A-701 SCALE: 1 1/2" = 1'-0"

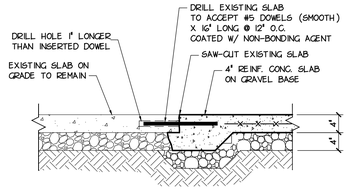

15 SLAB INFILL SECTION
A-701 SCALE: 3/4" = 1'-0"

RW SLEIGHTER
ENGINEERS & ARCHITECTS
1060 EBERLY WAY
LEMONT FURNACE, PA 15456
Phone 724.438.4010
Fax 724.438.4017
info@rwsleighter.com
WWW.RWSLEIGHTER.COM

CONFIDENTIAL - ALL RIGHTS RESERVED

SEAL

LOYALHANNA APARTMENT RENOVATIONS
1111 JEFFERSON STREET
LATROBE, PENNSYLVANIA 15650
PROJECT

WESTMORELAND COUNTY HOUSING AUTHORITY
167 SOUTH GREENGATE ROAD
GREENSBURG, PENNSYLVANIA 15601
OWNER

REVISION		
NO.	DATE	DESCRIPTION

DATE	PROJECT NUMBER
MAY 6, 2019	R17-077-04

DESIGNED	DRAWN	CHECKED
---	---	---

SHEET NAME
CASEWORK SECTIONS

SHEET NUMBER
A-701

P:\077 - Westmoreland County Housing Authority\R17-077-04 - WCHA Loyalhanna\Dwg\Sheets\A-701.dwg, Date: 5/8/2019 6:01:31 PM, Plotted By: SEAN KEIFFER

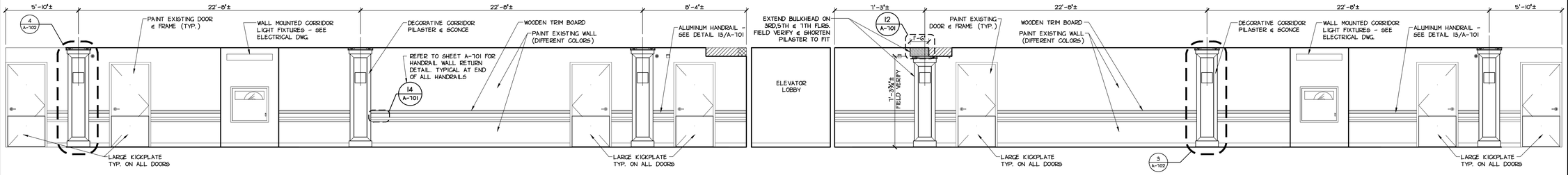

1 A-702 CORRIDOR ELEVATION

SCALE: 1/4" = 1'-0"

NOTES:

1. NOT ALL EXISTING MISC. WALL & CEILING EQUIPMENT SHOWN. VERIFY EXISTING LOCATIONS TO ENSURE THE PLACEMENT OF CORRIDOR PILATERS DOES NOT CONFLICT. REPORT ANY ISSUES TO THE ARCHITECT PRIOR TO START OF CORRIDOR WORK.
2. MODIFY PILASTERS LOCATED ON THE 8TH FLOOR ACCORDINGLY TO ALLOW PIPING FROM THE CENTRAL HOT WATER SYSTEM TO PASS THROUGH THE PILASTERS

HATCH LEGEND:

EXISTING BULKHEAD ON 3RD,5TH & 7TH FLOORS

EXISTING BULKHEAD ON 2ND,4TH,6TH & 8TH FLOORS

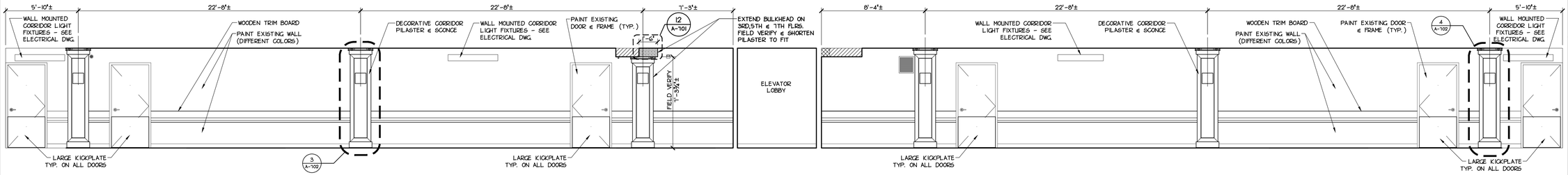

1 A-702 CORRIDOR ELEVATION

SCALE: 1/4" = 1'-0"

NOTES:

1. NOT ALL EXISTING MISC. WALL & CEILING EQUIPMENT SHOWN. VERIFY EXISTING LOCATIONS TO ENSURE THE PLACEMENT OF CORRIDOR PILATERS DOES NOT CONFLICT. REPORT ANY ISSUES TO THE ARCHITECT PRIOR TO START OF CORRIDOR WORK.
2. MODIFY PILASTERS LOCATED ON THE 8TH FLOOR ACCORDINGLY TO ALLOW PIPING FROM THE CENTRAL HOT WATER SYSTEM TO PASS THROUGH THE PILASTERS

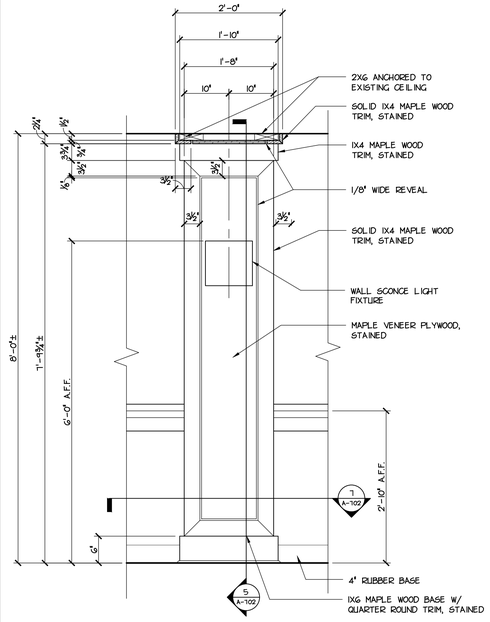

3 A-102 CORRIDOR PILASTER - ELEVATION

SCALE: 3/4" = 1'-0"

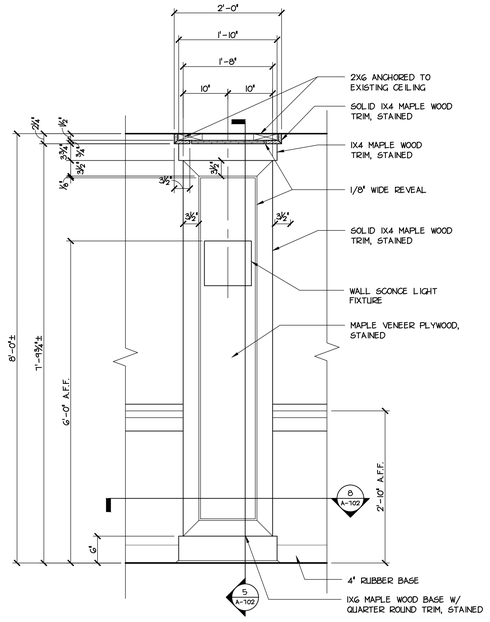

4 A-102 CORRIDOR PILASTER - ELEVATION

SCALE: 3/4" = 1'-0"

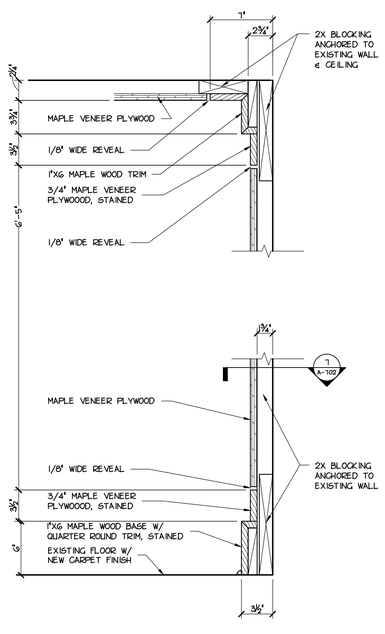

5 A-102 CORRIDOR PILASTER - SECTION

SCALE: 1 1/2" = 1'-0"

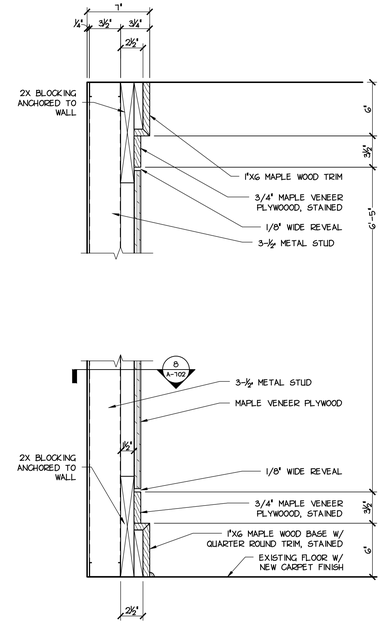

6 A-102 CORRIDOR PILASTER - SECTION

SCALE: 1 1/2" = 1'-0"

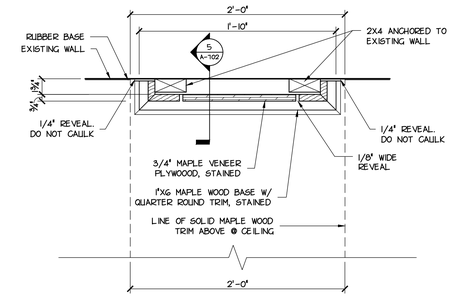

7 A-102 CORRIDOR PILASTER - DETAIL

SCALE: 1 1/2" = 1'-0"

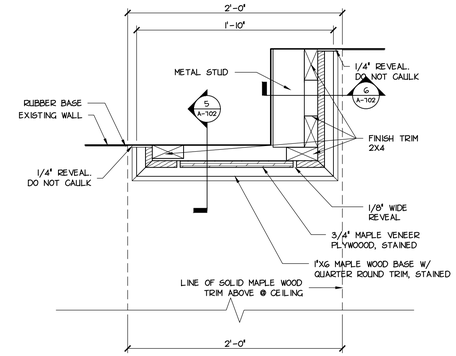

8 A-102 CORRIDOR PILASTER - DETAIL

SCALE: 1 1/2" = 1'-0"

RW SLEIGHTER
ENGINEERS & ARCHITECTS

1060 EBERLY WAY
LEMONT FURNACE, PA 15456
Phone 724.438.4010
Fax 724.438.4017
info@rwsleighter.com
WWW.RWSLEIGHTER.COM

CONFIDENTIAL - ALL RIGHTS RESERVED

SEAL

REGISTERED ARCHITECT COMMONWEALTH OF PENNSYLVANIA SCHROCK, RAYMOND E.

PROJECT

LOYALHANNA APARTMENT RENOVATIONS
1111 JEFFERSON STREET
LATROBE, PENNSYLVANIA 15650

OWNER

WESTMORELAND COUNTY HOUSING AUTHORITY
167 SOUTH GREENGATE ROAD
GREENSBURG, PENNSYLVANIA 15601

REVISION

NO.	DATE	DESCRIPTION

DATE	PROJECT NUMBER
MAY 6, 2019	R17-077-04

DESIGNED	DRAWN	CHECKED
----	----	----

SHEET NAME

CORRIDOR ELEVATIONS

SHEET NUMBER

A-702

P:\077 - Westmoreland County Housing Authority\R17-077-04 - WCHA Loyalhanna\Dwg\Sheets\A-702.dwg, Date: 5/8/2019 4:03:27 PM, Plotted By: SEAN KEIFER

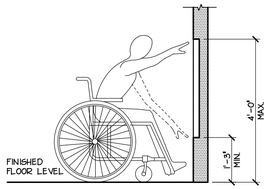

UNOBSTRUCTED FORWARD REACH FIGURE 308.2.1

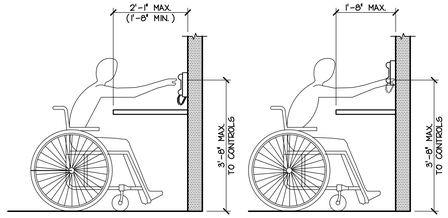

UNOBSTRUCTED HIGH FORWARD REACH FIGURE 308.2.2 (B)

OBSTRUCTED HIGH FORWARD REACH FIGURE 308.2.2 (A)

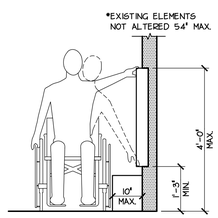

UNOBSTRUCTED SIDE REACH FIGURE 308.3.1

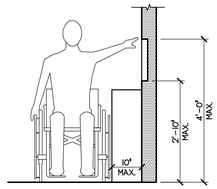

OBSTRUCTED SIDE REACH FIGURE 308.3.2 (A)

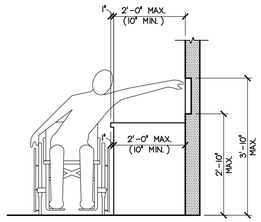

OBSTRUCTED SIDE REACH FIGURE 308.3.2 (B)

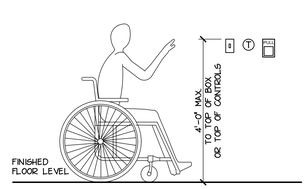

LIGHTING, ELECTRICAL, ENVIRONMENTAL, INTERCOM, PHONE, FIRE ALARM PULL AND SECURITY CONTROLS.

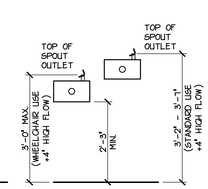

DRINKING FOUNTAINS FIGURE 602.4

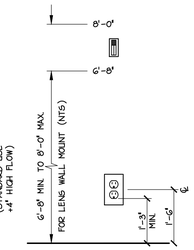

FIRE/SMOKE ALARM AND STROBES — ELECTRICAL OUTLET

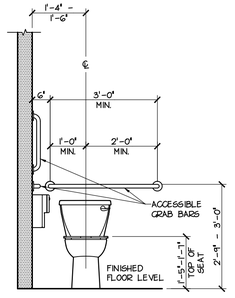

ACCESSIBLE TOILET FRONT VIEW FIGURE 604.4 & 604.5.2

ACCESSIBLE TOILET COMPARTMENT NOTES:
1. DOOR SHALL BE 32" MIN IN WIDTH AND SELF-CLOSING.
2. DOOR PULL SHALL BE PLACED ON BOTH SIDES OF THE DOOR NEAR THE LATCH.
3. COAT HOOK SHALL BE LOCATED ON INSIDE OF DOOR AT 4'-0"AFF.
4. LATCH OPERATION SHALL NOT REQUIRE TIGHT GRASPING, PINCHING OR TWISTING.
5. TOILET FLUSH CONTROLS TO BE LOCATED ON OPEN SIDE OF TOILET.

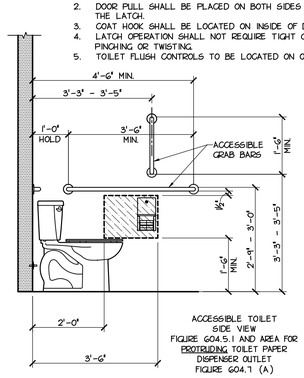

ACCESSIBLE TOILET SIDE VIEW FIGURE 604.5.1 AND AREA FOR PROTRUDING TOILET PAPER DISPENSER OUTLET FIGURE 604.7 (A)

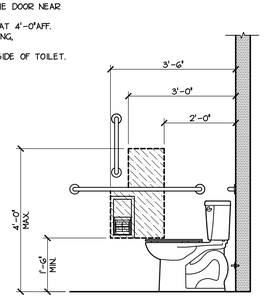

ACCESSIBLE TOILET SIDE VIEW AND AREA FOR RECESSED DISPENSER OUTLET FIGURE 604.7 (C)

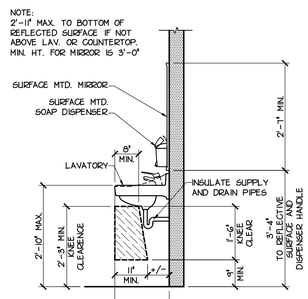

WALL MOUNTED ACCESSORIES AT LAVATORY

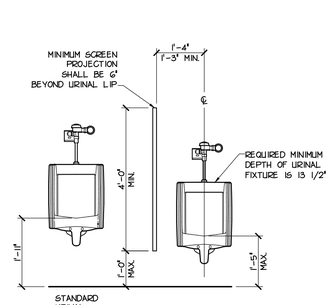

STANDARD URINAL — ACCESSIBLE URINAL FIGURE 605.2

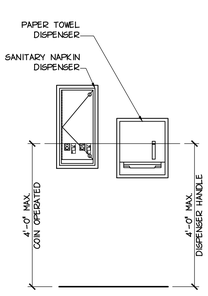

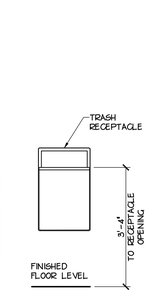

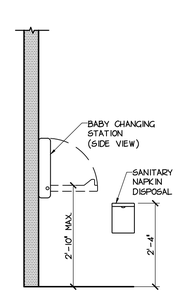

1 A-703 TYPICAL MOUNTING HEIGHTS AND TYPICAL ACCESSIBILITY DETAILS

SCALE: 1/2" = 1'-0"

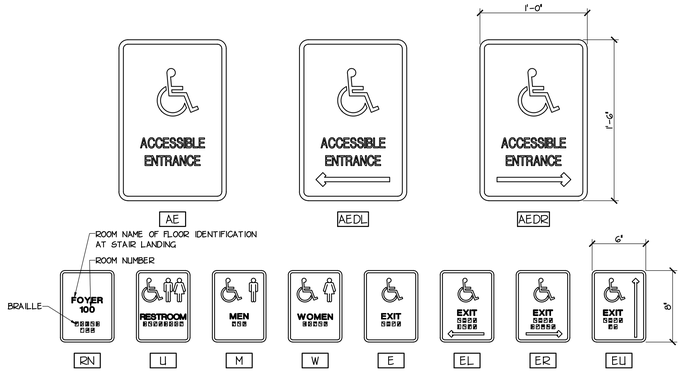

2 A-703 SIGNAGE ELEVATIONS

SCALE: 1 1/2" = 1'-0"

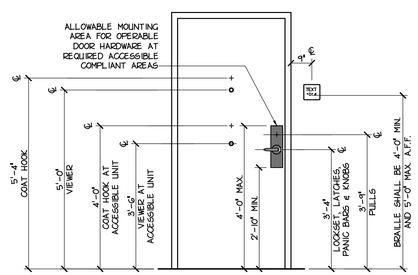

REPRESENTATIONAL GRAPHICS

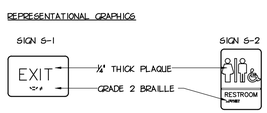

NOTES:
1. CHARACTERS AND SYMBOLS SHALL BE NON-GLARE AND CONTRAST WITH A NON GLARE BACKGROUND.
2. LETTERS AND NUMBERS ON SIGNS SHALL BE RAISED 1/32" MIN., SHALL BE A MIN.OF 5/8" HIGH AND MAX. OF 2" HIGH. FONT SHALL BE SANS-SERIF UPPERCASE CHARACTERS ACCOMPANIED BY GRADE 2 BRAILLE.
3. TACTILE SIGNAGE SHALL COMPLY WITH ICC/ANSI A117.1-2009, FIGURE 703.

3 A-703 ACCESSIBLE SIGNAGE MOUNTING GUIDELINES

SCALE: 1/2" = 1'-0"

RW SLEIGHTER
ENGINEERS & ARCHITECTS
1060 EBERLY WAY
LEMONT FURNACE, PA 15456
Phone 724.438.4010
Fax 724.438.4017
info@rwsleighter.com
WWW.RWSLEIGHTER.COM

CONFIDENTIAL - ALL RIGHTS RESERVED

SEAL

REGISTERED ARCHITECT COMMONWEALTH OF PENNSYLVANIA BUREAU OF SCHOOL FACILITIES

PROJECT
LOYALHANNA APARTMENT RENOVATIONS
1111 JEFFERSON STREET
LATROBE, PENNSYLVANIA 15650

OWNER
WESTMORELAND COUNTY HOUSING AUTHORITY
167 SOUTH GREENGATE ROAD
GREENSBURG, PENNSYLVANIA 15601

REVISION

NO.	DATE	DESCRIPTION

DATE	PROJECT NUMBER
MAY 6, 2019	R17-077-04

DESIGNED	DRAWN	CHECKED
----	----	----

SHEET NAME
TYPICAL MOUNTING HEIGHTS, DETAILS AND ELEVATIONS

SHEET NUMBER
A-703

P:\077 - Westmoreland County Housing Authority\R17-077-04 - WCHA Loyalhanna\Dwg\Sheets\A-703.dwg, Date: 5/8/2019 4:03:41 PM, Plotted By: SEAN KEFFER

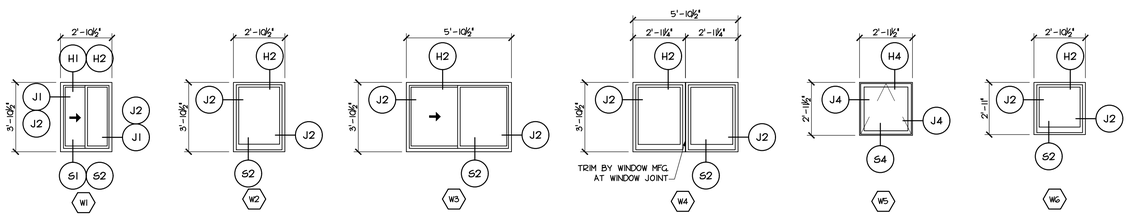

1 A-801 WINDOW TYPES
SCALE: 1/4" = 1'-0"

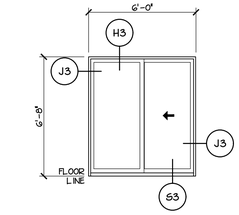

2 A-801 PATIO DOOR TYPE
SCALE: 1/4" = 1'-0"

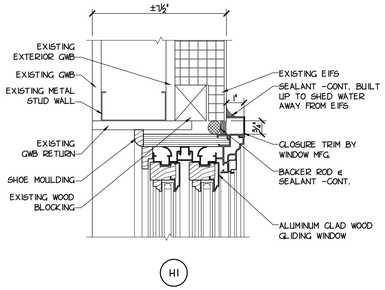

H1

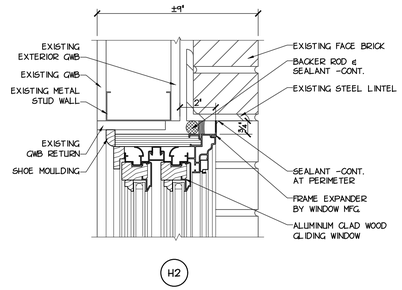

H2

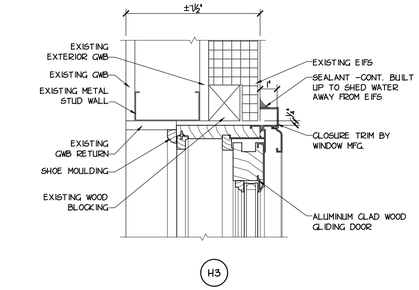

H3

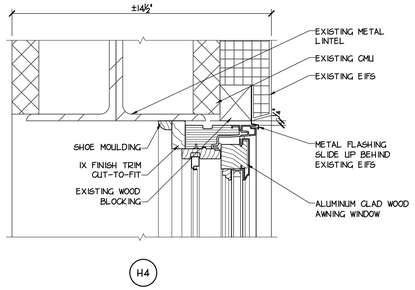

H4

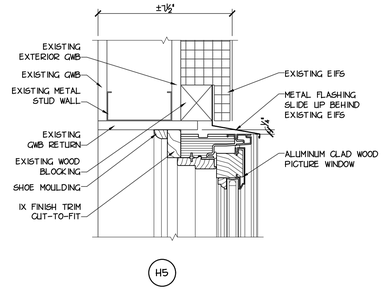

H5

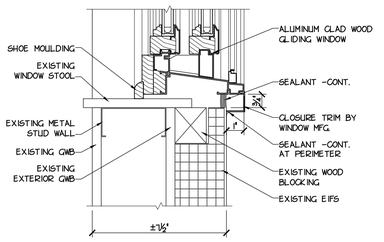

S1

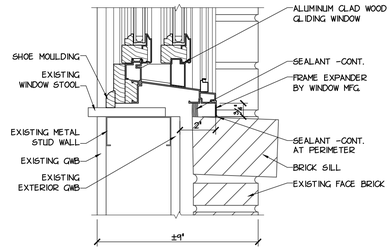

S2

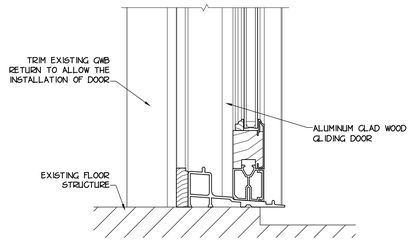

S3

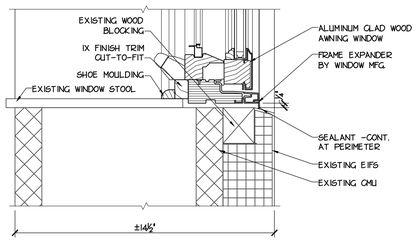

S4

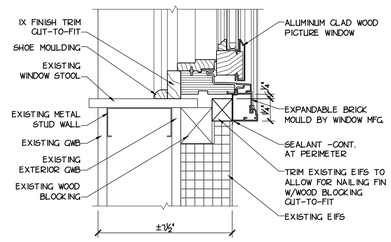

S5

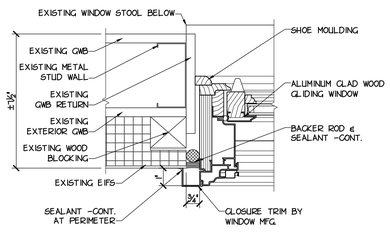

J1

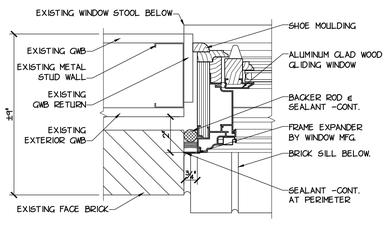

J2

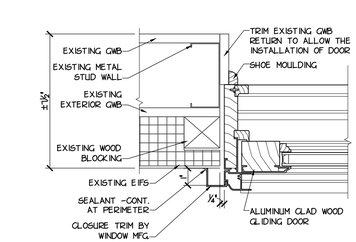

J3

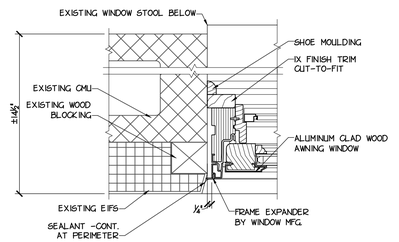

J4

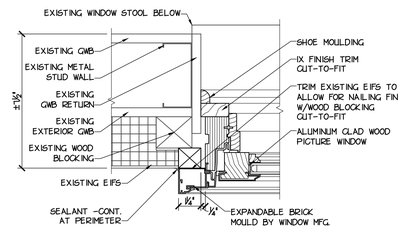

J5

3 A-801 WINDOW AND PATIO DOOR DETAILS
SCALE: 3" = 1'-0"

RW SLEIGHTER
ENGINEERS & ARCHITECTS
1060 EBERLY WAY
LEMONT FURNACE, PA 15456
Phone 724.438.4010
Fax 724.438.4017
info@rwsleighter.com
WWW.RWSLEIGHTER.COM

CONFIDENTIAL - ALL RIGHTS RESERVED

SEAL



PROJECT
LOYALHANNA APARTMENT RENOVATIONS
1111 JEFFERSON STREET
LATROBE, PENNSYLVANIA 15650

OWNER
WESTMORELAND COUNTY HOUSING AUTHORITY
167 SOUTH GREENGATE ROAD
GREENSBURG, PENNSYLVANIA 15601

REVISION

NO.	DATE	DESCRIPTION

DATE	PROJECT NUMBER
MAY 6, 2019	R17-077-04

DESIGNED	DRAWN	CHECKED
----	----	----

SHEET NAME
WINDOW AND PATIO DOOR DETAILS

SHEET NUMBER
A-801

P:\077 - Westmoreland County Housing Authority\R17-077-04 - WCHA Loyalhanna\Dwg\Sheets\A-802.dwg, Date: 5/8/2019 4:03:57 PM, Plotted By: SEAN KEFFER

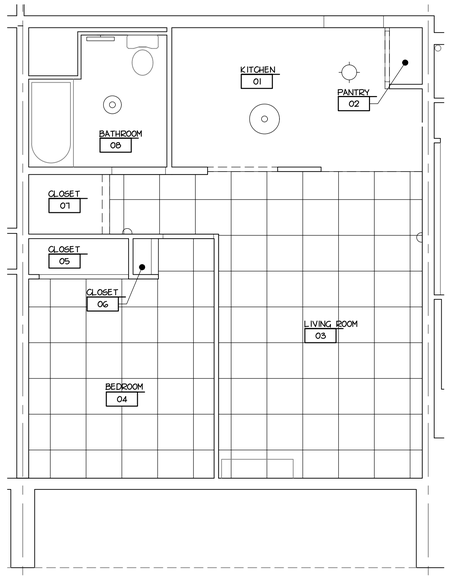

1 A-901 FIRST FLOOR TYPE 'A' REFLECTED CEILING PLAN
SCALE: ############

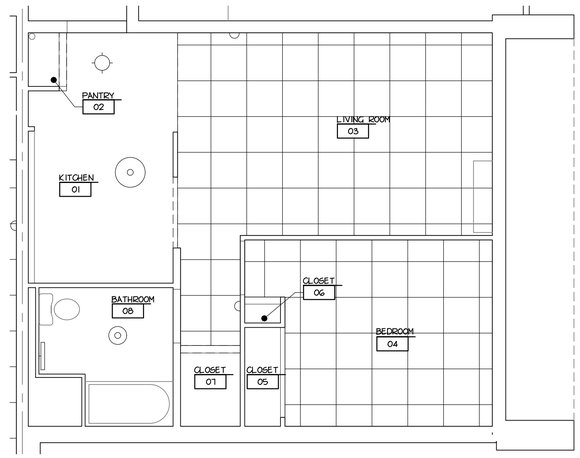

2 A-901 FIRST FLOOR TYPE 'B' REFLECTED CEILING PLAN
SCALE: 1/4" = 1'-0"

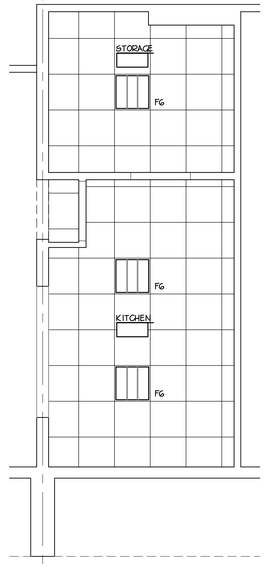

3 A-901 FIRST FLOOR COMMUNITY KITCHEN REFLECTED CEILING PLAN
SCALE: 1/4" = 1'-0"

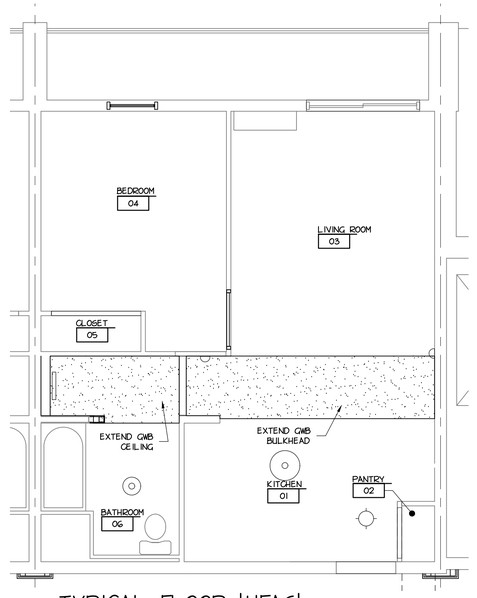

4 A-901 TYPICAL FLOOR 'UFAS' REFLECTED CEILING PLAN
SCALE: 1/4" = 1'-0"

NORTH

LEGEND	
	TENANT PANEL
	2X2 LED FIXTURE
E	EXISTING 2X2 FIXTURE (EXISTING FIXTURE IN NEW CEILING)
	LED WALL SCONCE
	LED WALL MOUNTED VANITY FIXTURE
	LED SURFACE MOUNTED FIXTURE
	LED SURFACE MOUNTED FIXTURE

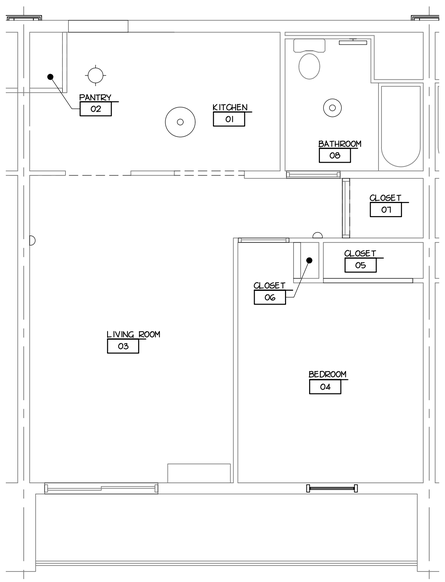

5 A-901 TYPICAL FLOOR TYPE 'A' REFLECTED CEILING PLAN
SCALE: 1/4" = 1'-0"

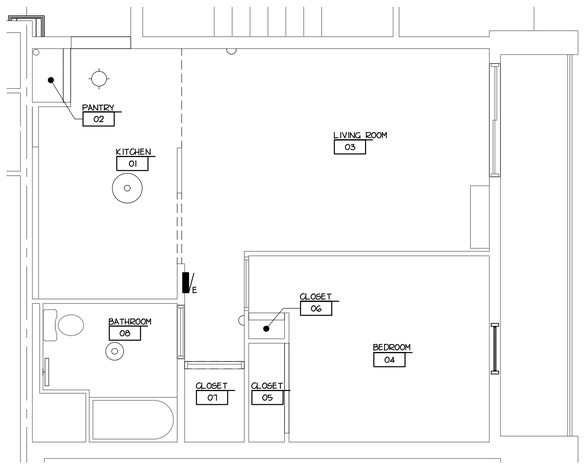

6 A-901 TYPICAL FLOOR TYPE 'B' REFLECTED CEILING PLAN
SCALE: 1/4" = 1'-0"

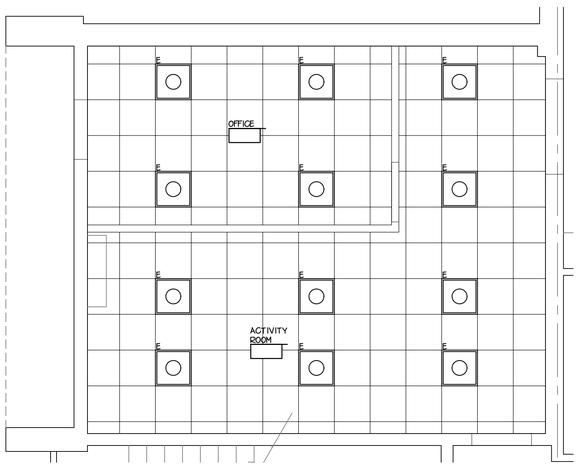

7 A-901 FIRST FLOOR NEW OFFICE REFLECTED CEILING PLAN
SCALE: 1/4" = 1'-0"

NORTH

RW SLEIGHTER
ENGINEERS & ARCHITECTS
1060 EBERLY WAY
LEMONT FURNACE, PA 15456
Phone 724.438.4010
Fax 724.438.4017
info@rwsleighter.com
WWW.RWSLEIGHTER.COM

CONFIDENTIAL - ALL RIGHTS RESERVED

SEAL

PROJECT
LOYALHANNA APARTMENT RENOVATIONS
1111 JEFFERSON STREET
LATROBE, PENNSYLVANIA 15650

OWNER
WESTMORELAND COUNTY HOUSING AUTHORITY
167 SOUTH GREENGATE ROAD
GREENSBURG, PENNSYLVANIA 15601

REVISION

NO.	DATE	DESCRIPTION

DATE	PROJECT NUMBER
MAY 6, 2019	R17-077-04

DESIGNED	DRAWN	CHECKED
----	----	----

SHEET NAME
REFLECTED CEILING PLANS

SHEET NUMBER
A-901

P:\077 - Westmoreland County Housing Authority\R17-077-04 - WCHA Loyalhanna\Dwg\Sheets\A-901.dwg, Date: 5/8/2019 4:04:22 PM, Plotted By: SEAN KEFFER

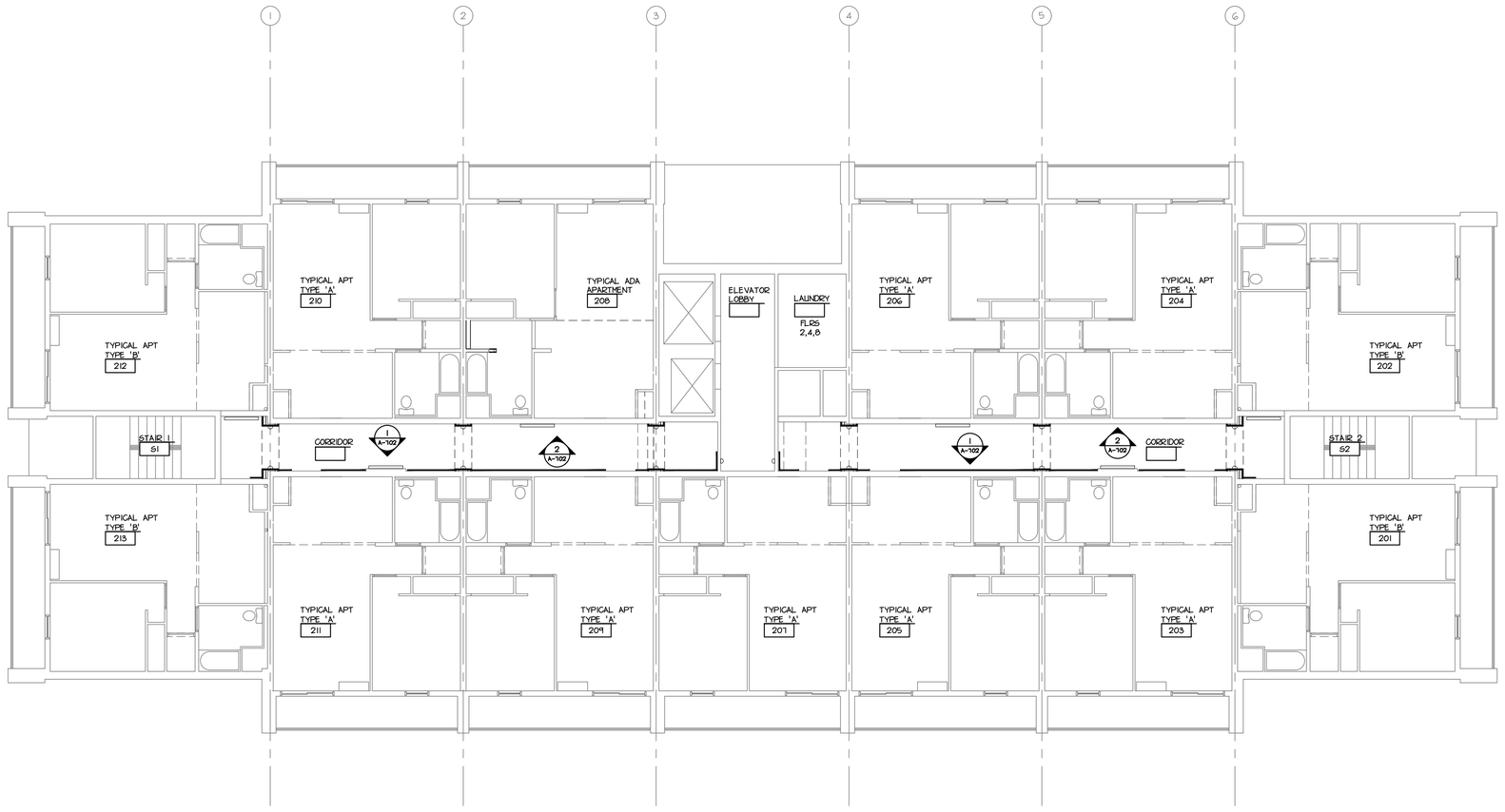

1 A-902 CORRIDOR REFLECTED CEILING PLAN
SCALE: 1/8" = 1'-0"

NORTH

LEGEND	
	TENANT PANEL
	2X2 LED FIXTURE
	LED WALL SCONCE
E	LED WALL MOUNTED VANITY FIXTURE (NEW AT EXISTING LOCATION)
E	LED SURFACE MOUNTED FIXTURE (NEW AT EXISTING LOCATION)
	LED SURFACE MOUNTED FIXTURE
E	LED WALL MOUNTED LINEAR FIXTURE (NEW AT EXISTING LOCATION)

RW SLEIGHTER
ENGINEERS & ARCHITECTS
1060 EBERLY WAY
LEMONT FURNACE, PA 15456
Phone 724.438.4010
Fax 724.438.4017
info@rwsleighter.com
WWW.RWSLEIGHTER.COM

CONFIDENTIAL - ALL RIGHTS RESERVED

SEAL



PROJECT
LOYALHANNA APARTMENT RENOVATIONS
1111 JEFFERSON STREET
LATROBE, PENNSYLVANIA 15650

OWNER
WESTMORELAND COUNTY HOUSING AUTHORITY
167 SOUTH GREENGATE ROAD
GREENSBURG, PENNSYLVANIA 15601

REVISION

NO.	DATE	DESCRIPTION

DATE	PROJECT NUMBER
MAY 6, 2019	R17-077-04

DESIGNED	DRAWN	CHECKED
----	----	----

SHEET NAME
TYPICAL CORRIDOR REFLECTED CEILING PLAN

SHEET NUMBER
A-902

P:\077 - Westmoreland County Housing Authority\R17-077-04 - WCHA Loyalhanna\Dwg\Sheets\A-902.dwg, Date: 5/8/2019 4:04:31 PM, Plotted By: SEAN KEFFER

GENERAL NOTES

1. NOT ALL THE SYMBOLS OR ABBREVIATIONS ARE NECESSARILY USED ON THE CONTRACT DRAWINGS.
2. PLANS ARE INTENDED TO SHOW THE GENERAL ARRANGEMENT OF EQUIPMENT. DRAWINGS ARE NOT TO BE SCALED. THE CONTRACTOR IS RESPONSIBLE FOR VERIFYING ALL LOCATIONS, CONDITIONS AND DIMENSIONS.
3. COORDINATE LOCATION OF DUCTWORK WITH ALL OTHER TRADES.
4. ARROWS ON SUPPLY AND RETURN LINES INDICATE DIRECTION OF FLOW.
5. ALL DIMENSIONS SHOWN ON THE DRAWINGS ARE IN INCHES EXCEPT AS NOTED OTHERWISE.
6. THE CONTRACTOR SHALL COORDINATE EXACT LOCATIONS OF DUCT OPENINGS WITH THE GENERAL CONTRACTOR.
7. BLANK OFF ALL UNUSED PORTIONS OF LOUVERS WITH 2" INSULATED METAL PANEL. SEAL ALL JOINTS AND FITTINGS TO MAKE AN AIR TIGHT FIT.
8. ALL CONTRACTORS ARE RESPONSIBLE FOR THE ENTIRE BIDDING SET. IF THE ARCHITECTURAL DRAWINGS INDIDCATE WORK TO BE COMPLETED BY THE HVAC CONTRACTOR THEN THE HVAC CONTRACTOR IS RESPONSIBLE FOR THAT WORK.
9. DEMOLITION PLANS ARE SHOWN FOR CLARITY AND COORDINATION. CONTRACTOR SHALL REMOVE ALL HVAC EQUIPMENT AND ASSOCIATED APPERTURANCES COMPLETE WHETHER SHOWN OR NOT. CONTRACTOR SHALL WORK IN PHASES AS DETERMNINED BY OWNER/ARCHITECT. CONTRACTOR SHALL REPORT ANY DESCREPANCIES OR CHANGES IN SCOPE OF WORK PRIOR TO COMMENCING REMOVAL WORK WITH OWNER/ARCHITECT.
10. ITEMS SHOWN WITH LINE TYPES WITH A LIGHT LINE WEIGHT ARE EXISTING TO REMAIN. ITEMS SHOWN WITH HEAVY OR DASHED LINE WEIGHT ARE TO BE DEMOLISHED ON DEMOLITION DRAWINGS AND NEW AND OR RELOCATED ITEMS TO BE INSTALLED ON NEW WORK DRAWINGS.
11. MECHANICAL CONTRACTOR SHALL FIELD VERIFY ALL EXISTING CONDITIONS AND MEASUREMENTS OF EIXISTING BUILDING WALLS AND STRUCTURE CLEARANCES PRIOR TO INSTALLED ANY MATERIALS OR EQUIPMENT.
12. FIRST FIGURE OF DUCT SIZE INDICATED DIMENSION OF FACE SHOWN OR INDICATED. ALL DUCTWORK TO BE GALVANIZED SHEET METAL. ALL DUCTWORK SHALL BE FABRICATED TO SMACNA SHEET METAL STANDARDS. ALL DUCT JOINTS SHALL BE SEALED AIR TIGHT WITH A WATER RESISTANT FIRE RESISTIVE, CHEMICALLY COMPATIBLE WITH SEALANT AND MATING MATERIALS. DO NOT USE OIL BASE CAULKING, MASTICS OR GLAZING COMPOUNDS.
13. CONTRACTOR TO PROVIDE MANUFACTURER'S CONTROLS AND WALL MOUNTED THERMOSTAT ALL CONTROLS TO BE FACTORY SUPPLIED BY MUA MANUFACTURER.
14. ALL PIPING TO BE SUPPORTED EVERY 4'–0" WITH PIPE HANGER. SUPPORT FROM BUILDING STRUCTURE, NOT FROM MECHANICAL EQUIPMENT, DUCTS, ACOUSTICAL TILE CEILING, ETC..
15. ALL SUPPLY DUCTS SHALL BE INSULATED WITH 2.2" THICK FIBERGLASS FOILFACED INSULATION. ALL INSULATION SHALL BE ADHERED TO DUCTS BY FIRE RESISTIVE ADHESIVE. ALL JOINTS SHALL BE SEALED WITH 2" WIDE VAPOR BARRIER TABS OR STRIPS USING A FIRE RESISTIVE ADHESIVE.

DEMOLITION GENERAL NOTES

1. NOT ALL THE SYMBOLS OR ABBREVIATIONS ARE NECESSARILY USED ON THE CONTRACT DRAWINGS.
2. PLANS ARE INTENDED TO SHOW THE GENERAL ARRANGEMENT OF EQUIPMENT. DRAWINGS ARE NOT TO BE SCALED. THE CONTRACTOR IS RESPONSIBLE FOR VERIFYING ALL LOCATIONS, CONDITIONS AND DIMENSIONS.
3. COORDINATE DISCONNECTION OF EQUIPMENT WITH ALL OTHER TRADES.
4. ALL PIPING AND DUCTWORK BEING DISCONNECTED AND REMOVED SHALL INCLUDE TEMPORARILY CAPPING EXISTING CONNECTIONS TO PROTECT THE EXISTING SYSTEMS PRIOR TO NEW WORK COMMENCING. CONTRACTOR SHALL REPORT ANY DISCREPANCIES TO THE ARCHITECT/ENGINEER PRIOR TO COMMENCING WITH WORK.
5. DEMOLITION PLANS ARE SHOWN FOR CLARITY AND COORDINATION. CONTRACTOR SHALL REMOVE ALL HVAC EQUIPMENT AND ASSOCIATED APPURTENANCES COMPLETE WHETHER SHOWN OR NOT. IF ANY SYSTEM IS TO BE RECONNECTED, THE CONTRACTOR SHALL COORDINATE ALL SYSTEMS BEING RE–USED WITH NEW WORK PLANS.
6. MECHANICAL CONTRACTOR SHALL FIELD VERIFY ALL EXISTING CONDITIONS AND MEASUREMENTS OF EXISTING BUILDING WALLS AND STRUCTURE.

DRAWINGS SYMBOLS

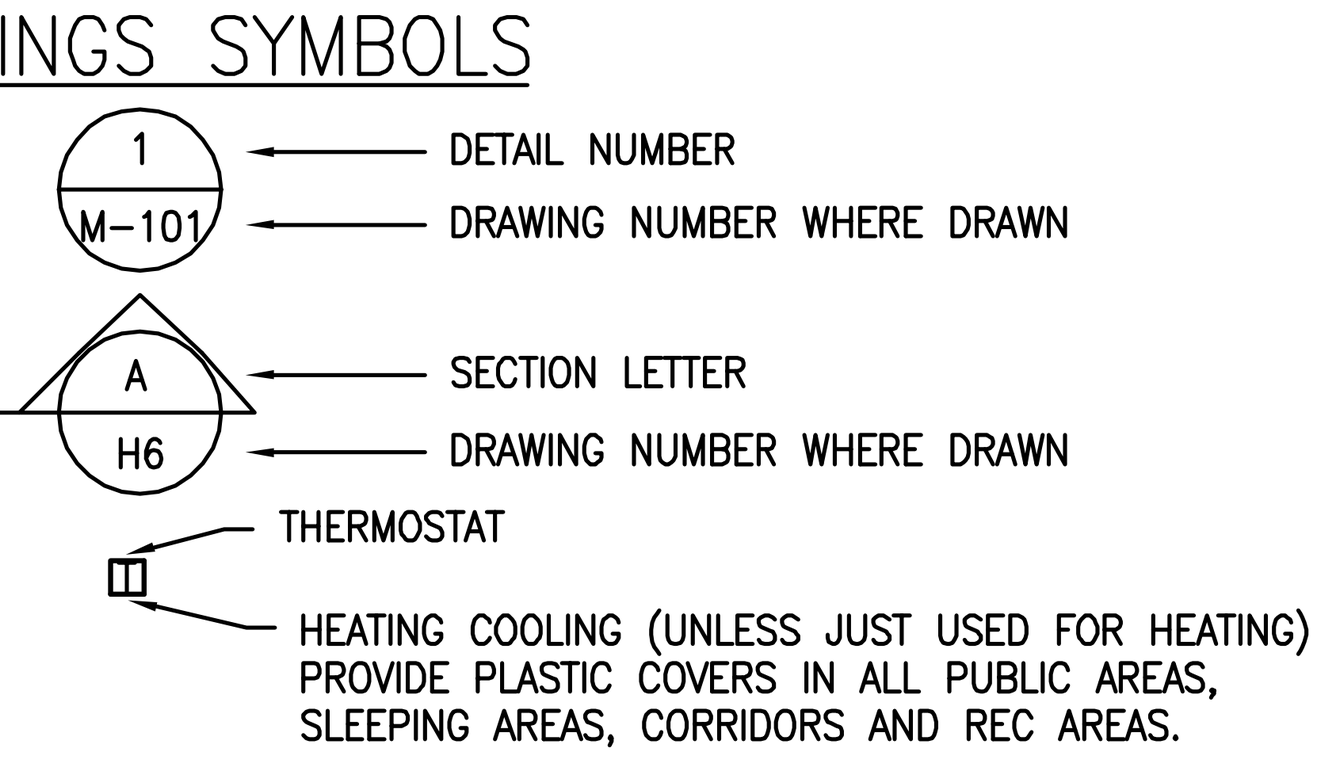

FLOOR PLAN TITLES
SCALE: 1/8"=1'-0"

ABBREVIATIONS

AAV	AUTOMATIC AIR VENT
ABV	ABOVE
ACCU	AIR COOLED CONDENSING UNIT
AD	ACCESS DOOR
AFF	ABOVE FINISHED FLOOR
AFMD	AIR FLOW MEASURING DEVICE
AHU	AIR HANDLING UNIT
AP	ACCESS PANEL
APD	AIR PRESSURE DROP
APPROX	APPROXIMATELY
ATC	AUTOMATIC TEMPERATURE CONTROL
AUTO	AUTOMATIC
AWT	AVERAGE WATER TEMPERATURE
BC	BALANCING COCK
BDD	BACKDRAFT DAMPER
BHP	BREAK HORSE POWER
BLDG	BUILDING
BLR	BOILER
BLW	BELOW
BTM	BOTTOM
BTU	BRITISH THERMAL UNIT
CAP	CAPACITY
CFH	CUBIC FEET/ HOUR
CFM	CUBIC FEET PER MINUTE
CHARA	CHARACTERISTICS
CHK V	CHECK VALVE
CLG	CEILING
CLG MTD	CEILING MOUNTED
COND	CONDENSATE
CO	CLEANOUT
COL	COLUMN
CMPR	COMPRESSOR
CONC	CONCRETE
CONN	CONNECTION
CONT	CONTINUE
CONTR	CONTRACTOR
CONV	CONVECTOR
CORR	CORRIDOR
CUH	CABINET UNIT HEATER
CV	CONTROL VALVE
CW	COLD WATER
DB	DRY BULB
DIFF	DIFFUSER
DISCH	DISCHARGE
DN	DOWN
DO	DITTO
DPR	DAMPER
DR	DRAIN
DWG	DRAWING
DX	DIRECT EXPANSION
EA	EACH
EAT	ENTERING AIR TEMPERATURE
EC	ELECTRICAL CONTRACTOR
EDB	ENTERING DRY BULB
EF	EXHAUST FANS
ELECT	ELECTRIC
EMER	EMERGENCY
EQUIP	EQUIPMENT
ERC	EXHAUST REGISTER CEILING
ERW	EXHAUST REGISTER WALL
ESP	EQUIVALENT STATIC PRESSURE
EWB	ENTERING WET BULB
EWH	ELECTRIC WALL HEATER
EWT	ENTERING WATER TEMPERATURE
EXH	EXHAUST
.EXIST	EXISTING
F	FAHRENHEIT
FAT	FINAL AIR TEMPERATURE
FC	FLEXIBLE CONNECTION
FD	FIRE DAMPER
FLG C	FLANGE CONNECTION
FLR	FLOOR
FLR DR	FLOOR DRAIN
FR	FROM
FRM	FROM
FT HD	FEET OF HEAD
GA	GAUGE
GC	GENERAL CONTRACTOR
GL V	GLOBE VALVE
GPM	GALLONS/MINUTE
GRAV	GRAVITY
GV	GATE VALVE
HC	HEATING CONTRACTOR
HP	HORSE POWER
HPD	HIGH PRESSURE DROP
HR	HOUR
HGT	HEIGHT
HTG	HEATING
HUH	HORIZONTAL UNIT HEATER
HV	HIGH VELOCITY
HW	HOT WATER
HWR	HOT WATER RETURN
HWS	HOT WATER SUPPLY
HWS&R	HOT WATER SUPPLY AND RETURN
IER	INVERTED ECCENTRIC REDUCER
IME	INSULATED METAL ENCLOSURE
IN	INCHES
INCL	INCLUDED
INSUL	INSULATION
INTERL	INTERLOCK
INV	INVERT
IVS	ISOLATION VALVE STATION
KW	KILOWATT
LAT	LEAVING AIR TEMPERATURE
LF	LINEAR FEET
LSDC	LINEAR SUPPLY DIFFUSER CEILING
LTG	LIGHTING
LWT	LEAVING WATER TEMPERATURE
MANUF	MANUFACTURER
MAT	MIXED AIR TEMPERATURE
MAV	MANUAL AIR VENT
MAX	MAXIMUM
MBH	ONE THOUSAND BTU/HOUR
MCA	MAXIMUM CIRCUIT AMPERE
MD	MOTORIZED DAMPER
MECH	MECHANICAL
MECH RM	MECHANICAL ROOM
MFGR	MANUFACTURER
MH	MANHOLE
MHC	MANHOLE COVER
MIN	MINIMUM
MTD	MOUNTED
MTG	MOUNTING
MTL	METAL
MTR	MOTOR
N/A	NOT APPLICABLE
NO	NUMBER
NTS	NOT TO SCALE
OA	OUTSIDE AIR
OAT	OUTSIDE AIR TEMPERATURE
OBD	OPPOSED BLADE DAMPER
OPER	OPERATED
OPNG	OPENING
OS&Y	OUTSIDE SCREW AND YOKE
PC	PLUMBING CONTRACTOR
PD	PUMP DISCHARGE
PEND MTD	PENDANT MOUNTED
PG	PRESSURE GAUGE WITH COCK
PRD	PRESSURE DIFFERENTIAL VALVE
PRV	PRESSURE REDUCING VALVE
PT	PRESSURE TAP
PVC	POLY VINYL CHLORIDE
RA	RETURN AIR
RAF	RETURN AIR FAN
RAG	RETURN AIR GRILLE
RED	REDUCER
REF	REFRIGERANT OR REFERENCE
REQD	REQUIRED
RET	RETURN
RM	ROOM
RP	RADIANT PANEL
RPM	REVOLUTIONS PER MINUTE
RRW	RETURN REGISTER WALL
RS&L	REFRIGERANT SUCTION AND LIQUID
RV	RELIEF VALVE
SA	SUPPLY AIR
SCH	SCHEDULE
SD	SMOKE DAMPER
SDC	SUPPLY DIFFUSER CEILING
SENS	SENSIBLE
SGC	SUPPLY GRILLE CEILING
SGW	SUPPLY GRILLE WALL
SHT	SHEET
SHT MTL	SHEET METAL
SLSD	SUPPLY LINEAR SLOT DIFFUSER
SP	STATIC PRESSURE
SPS	STATIC PRESSURE SENSOR
STL	STEEL
STR	STRAINER
TA	THROWAWAY
TCV	TEMPERATURE CONTROL VALVE
TDV	TRIPLE DUTY VALVE
TEMP	TEMPERATURE
TH	THERMOMETER
TR	TEMPERATURE RISE
TRANS	TRANSITION
T STAT	THERMOSTAT
TV	TURNING VANES
TYP	TYPICAL
UC	UNDERCUT
UH	UNIT HEATER
UV	UNIT VENTILATOR
V	VALVE
VCD	VOLUME CONTROL DAMPER
VFS	VENTURI FLOW STATION
V–PH–Hz	VOLTS–PHASE–HERTZ
W	WATTS OR WIDTH
WB	WET BULB
WFMD	WATER FLOW MEASURING DEVICE
WG	WATER GAUGE
WTD	WATER TEMPERATURE DROP
W/	WITH

NOTE:
NOT ALL THE SYMBOLS OR ABBREVIATIONS ARE NECESSARILY USED ON THE CONTRACT DRAWINGS.

DUCTWORK

DOUBLE LINE SYMBOLS	DESCRIPTION
12x12	RECTANGULAR SUPPLY, RETURN, EXHAUST OR RELIEF DUCT WIDTH (SHOWN)xDEPTH
12/12	OVAL SUPPLY, RETURN OR RELIEF DUCT WIDTH (SHOWN)xDEPTH
12ø	ROUND SUPPLY, RETURN OR RELIEF DUCT– ø (DIAMETER)
	DUCT W/TURNING VANES (DUCT WIDTH OVER 18")
	DUCT W/O TURNING VANES
	RADIUS ELBOW (DUCT WIDTH 17" AND LOWER)
	LOW LOSS TAKE OFF (ARROW INDICATES DIRECTION OF AIR FLOW)
	TAKE OFF
	BOOT CONNECTION WITH MANUAL VCD (ARROW INDICATES AIR FLOW DIRECTION)
	EQUIPMENT FLEX CONNECTION
	FLEXIBLE DUCT TAKE OFF
12x12 8ø	TRANSITION FROM RECTANGULAR TO ROUND DUCT
24x10	SPLITTER TEE
S	DUCT/SPACE STATIC PRESSURE SENSOR
T	DUCT/WALL TEMPERATURE SENSOR, ELECTRIC
T	DUCT/WALL TEMPERATURE SENSOR, PNEUMATIC
SD	DUCT MOUNTED SMOKE DETECTOR PROVIDED BY EC, INSTALLED BY H.C.
XX / XX	EQUIPMENT SYMBOL
	PUMP
12x12	VOLUME CONTROL DAMPER (VCD)
24x24 → R 24x24	RISE/DROP IN DUCTWORK (ARROW SHOWS DIRECTION OF DROP)
	RETURN AIR DUCT UP
	SUPPLY DUCT UP
	EXHAUST AIR DUCT UP
	RETURN AIR DUCT DN
	SUPPLY DUCT DN
	EHAUST AIR DUCT DN
M	MOTORIZED DAMPER
FD	FIRE DAMPER AT FIRE WALL (PROVIDE ACCESS PANEL IN DUCT AND CEILING) AS MANUF. BY RUSKIN
S	SMOKE DAMPER/DETECTOR DETECTOR BY E.C. DAMPER BY H.C.
C	COMBINATION FIRE/SMOKE DAMPER
FD FD	FIRE DAMPER IN VERTICAL DUCT THRU FLOOR OR HORIZONTAL DUCT ABOVE CEILING (PROVIDE ACCESS PANEL IN DUCT AND WALL OR CEILING)
A D	ACCESS DOOR ON BOTTOM OF DUCT
AD	ACCESS DOOR ON SIDE OF DUCT
	SUPPLY AIR DIFFUSER CEILING
	RETURN AIR DIFFUSER CEILING
	EXHAUST REGISTER CEILING
	EXHAUST/RETURN AIR REGISTER (DUCT OR WALL)
	SUPPLY AIR REGISTER (DUCT OR WALL)

DOUBLE LINE SYMBOLS	DESCRIPTION
24x12	DUCT SIZE (WIDTH X DEPTH)
24"ø	ROUND DUCT SIZE (DIAMETER)
	FLEXIBLE DUCT (DIAMETER SIZE)
	SUPPLY DUCT CROSS SECTION UP
	SUPPLY DUCT CROSS SECTION DN
	RETURN CROSS SECTION UP
	RETURN CROSS SECTION DN
	EXHAUST CROSS SECTION UP
	SQUARE ELBOW WITH TURNING VANES
	RADIUS TURN ELBOW
	DUCT END CAP
	DUCT BRANCH
	DUCT SIZE OR TYPE TRANSITION
	POINT OF CONNECTION BETWEEN NEW AND EXISTING WORK
	POINT OF DISCONNECTION BETWEEN ITEMS TO BE DEMOLISHED AND ITEMS TO REMAIN
SDC–4	SUPPLY DIFFUSER CEILING – 4 WAY
6ø	NECK SIZE
200 CFM	CAPACITY

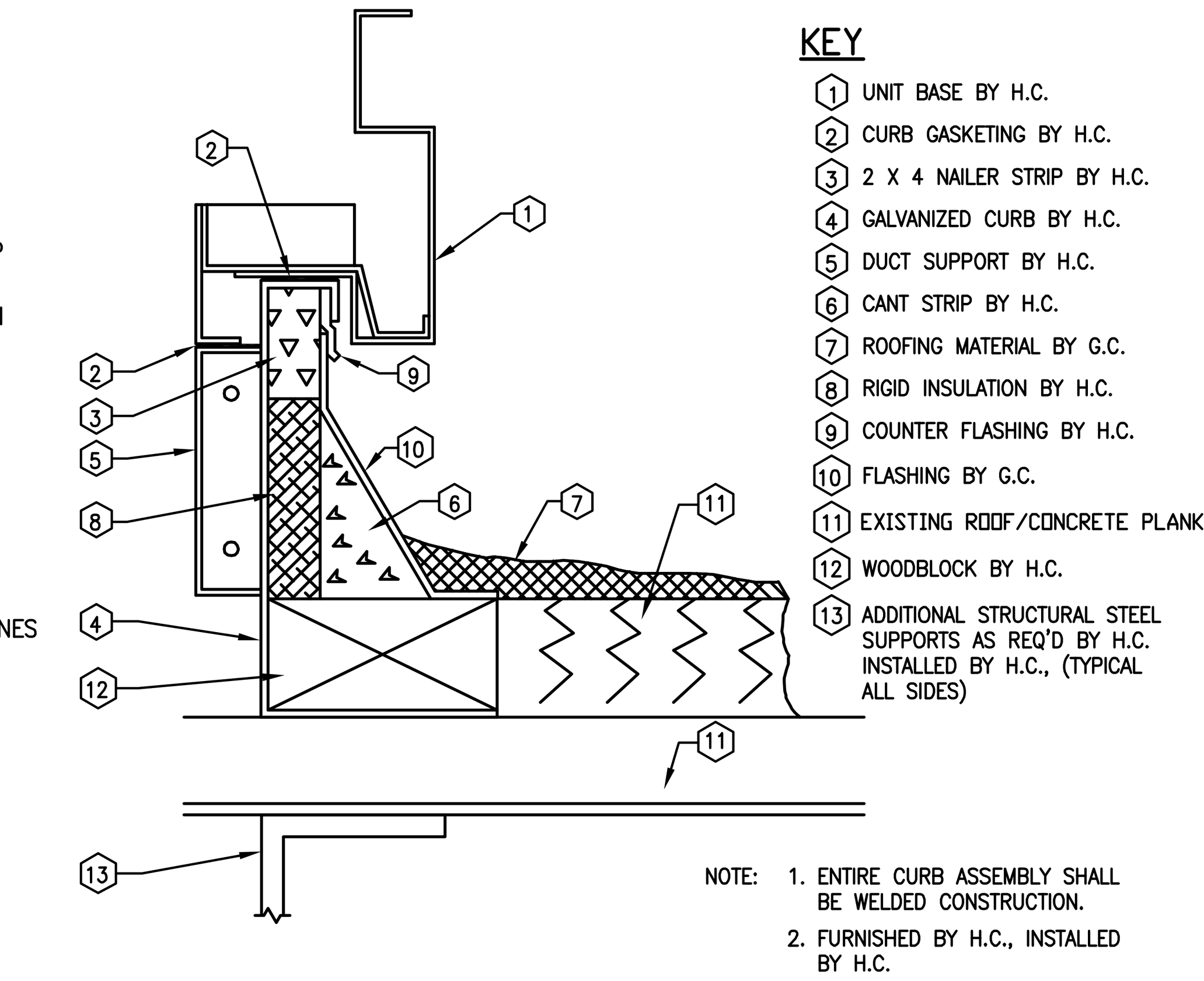

1 ROOF TOP UNIT CURB DETAIL
N.T.S.

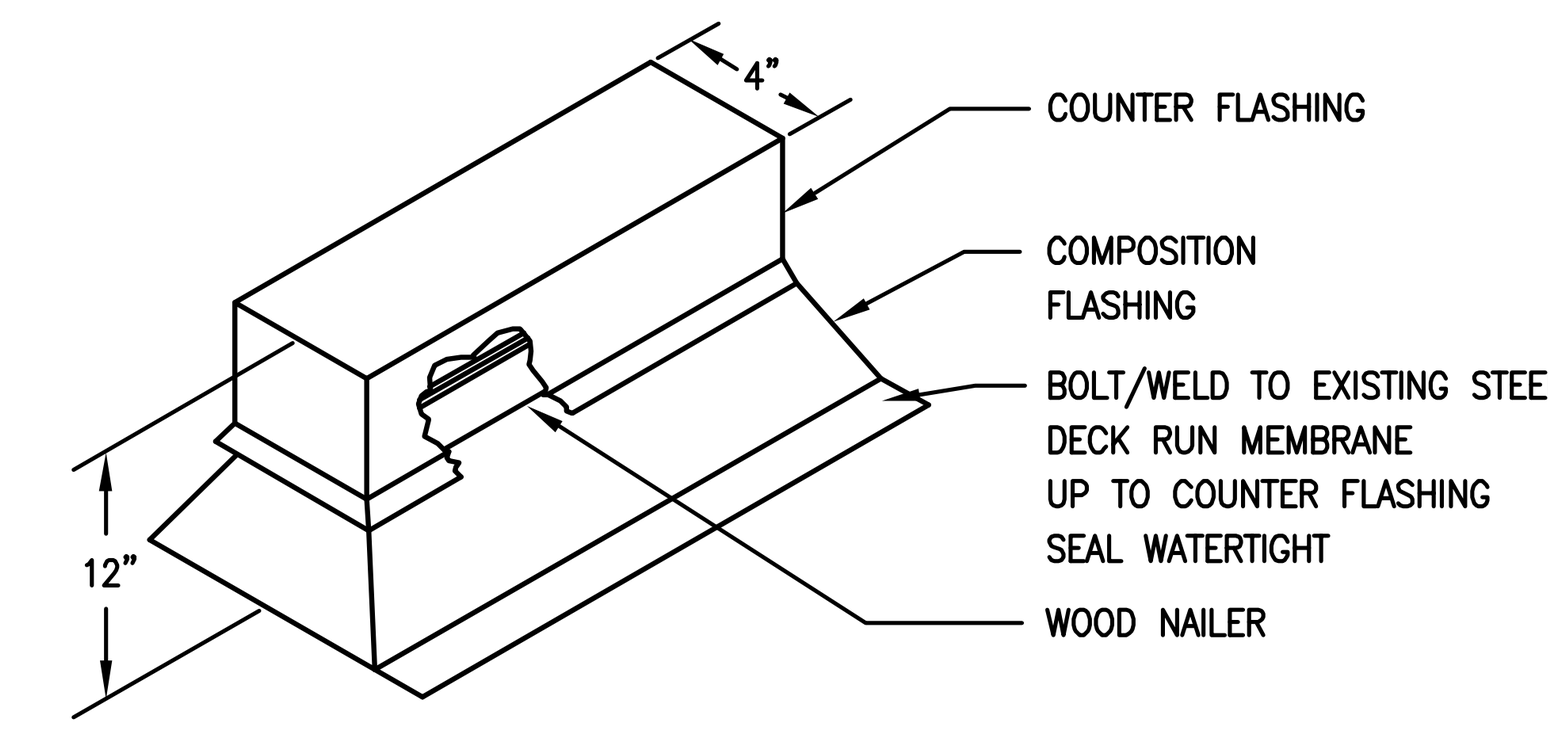

2 ROOF EQUIPMENT RAIL SUPPORT DETAIL
N.T.S.

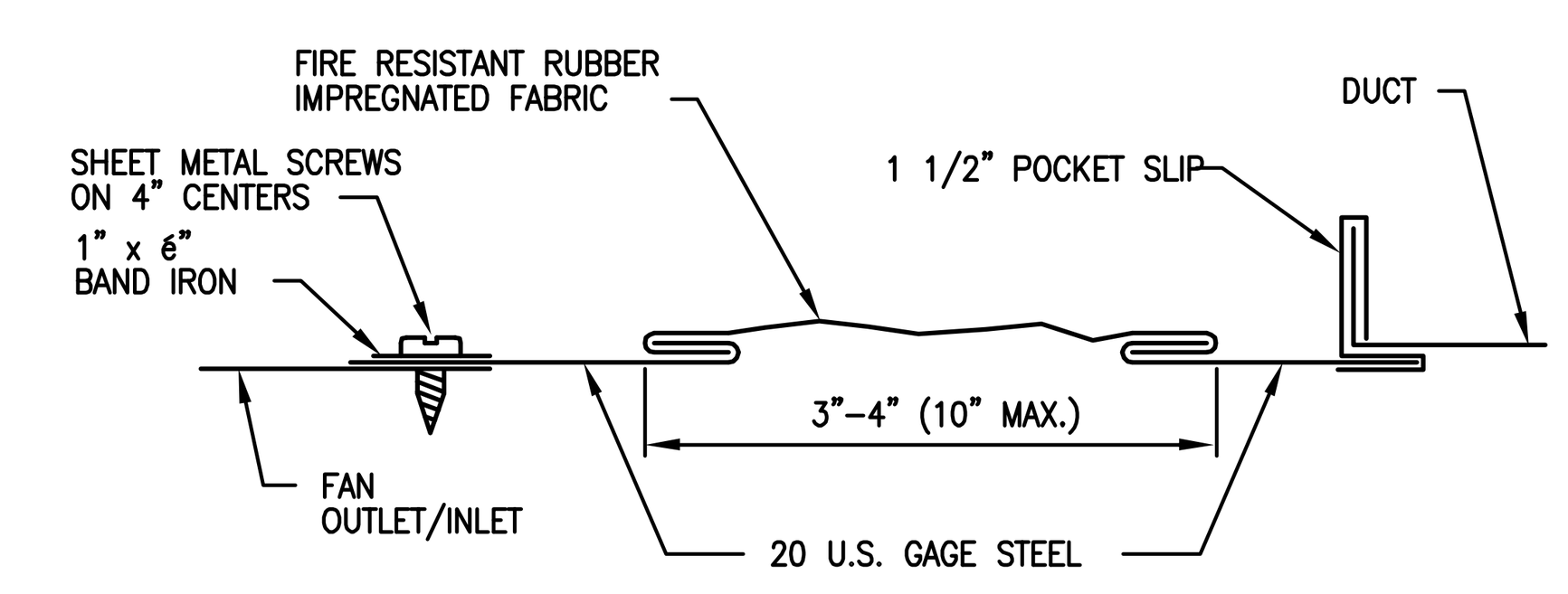

3 TYPICAL FLEXIBLE CONNECTION DETAIL
N.T.S.

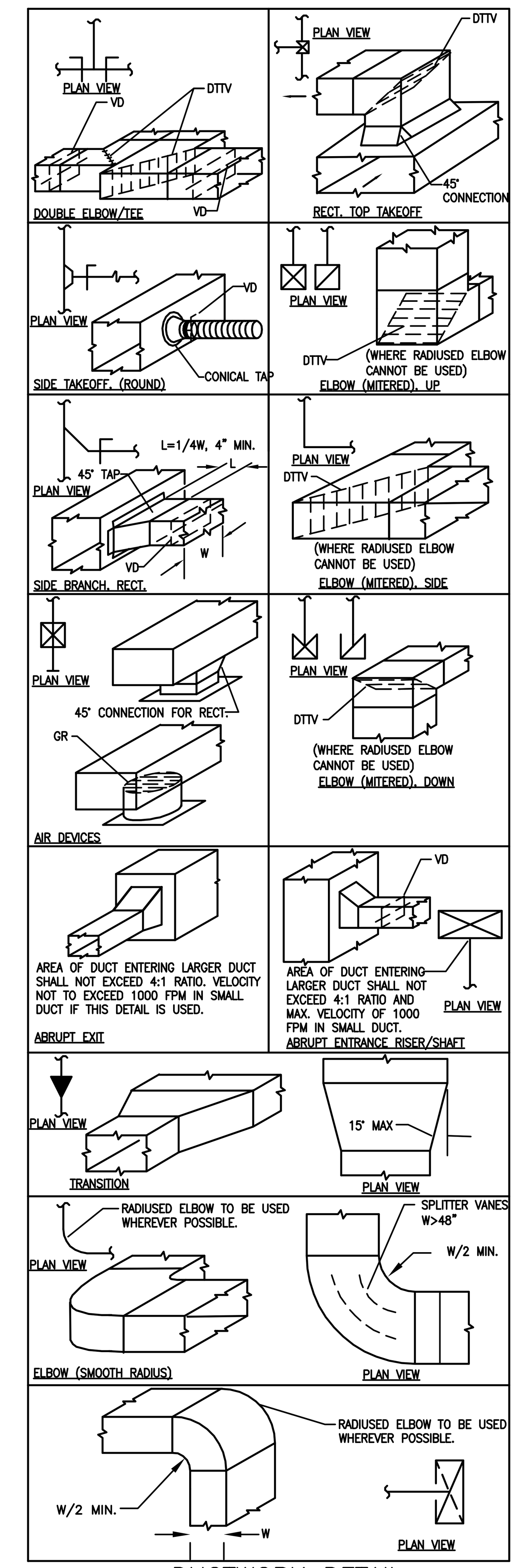

4 DUCTWORK DETAIL
N.T.S.

MAKE UP AIR UNIT SCHEDULE

Tag	MANUF	Model	Unit Size	Supply CFM	Outside CFM	ESP (in wg)	TSP (in wg)	SA Fan BHP	SA Fan HP	Heat Type	Heater EADB	Heater LADB	Heat Input	Heat Output	Weight (LBS)	Voltage	Unit FLA	MCA	MOP	Remarks
MUA–1	AAON	RNA	011	5000	5000	0.75	1.43	1.65	3.0	NAT. GAS	0.0	80.0	540.0 MBH	432.0 MBH	2288	208V/3/60Hz	14	17	25	NOTE 1

NOTES: 1. UNIT SHALL BE PROVIDED WITH MODULATING GAS HEATING.
2. PROVIDE SMOKE DETECTOR IN UNIT AND WIRE TO FIRE ALARM SYSTEM. COORDINATE TYPE, COMPATIBILITY REQUIREMENTS WITH FIRE ALARM SYSTEM.

RW SLEIGHTER
ENGINEERS & ARCHITECTS
1060 EBERLY WAY
LEMONT FURNACE, PA 15456
Phone 724.438.4010
Fax 724.438.4017
info@rwsleighter.com
WWW.RWSLEIGHTER.COM
CONFIDENTIAL - ALL RIGHTS RESERVED

SEAL: COMMONWEALTH OF PENNSYLVANIA REGISTERED PROFESSIONAL JOHN J. SOLARCZYK ENGINEER NO. 054230-E

PROJECT: LOYALHANNA APARTMENT RENOVATIONS
1111 JEFFERSON STREET
LATROBE, PENNSYLVANIA 15650

OWNER: WESTMORELAND COUNTY HOUSING AUTHORITY
154 S. GREENGATE ROAD
GREENSBURG, PENNSYLVANIA 15601

REVISION		
NO.	DATE	DESCRIPTION

DATE	PROJECT NUMBER	
MAY 6, 2019	R17-077-04	
DESIGNED	DRAWN	CHECKED
AAA	AAA	AAA

SHEET NAME: **HVAC - SYMBOLS & ABBREVIATIONS**

SHEET NUMBER: M-001

P:\Pyramid\Projects\18-61 WCHA Loyalhanna\HVAC\CAD\M-FP-rebid.dwg, Date: 5/6/2019 2:26:01 PM, Plotted By: ERIC HAUGH

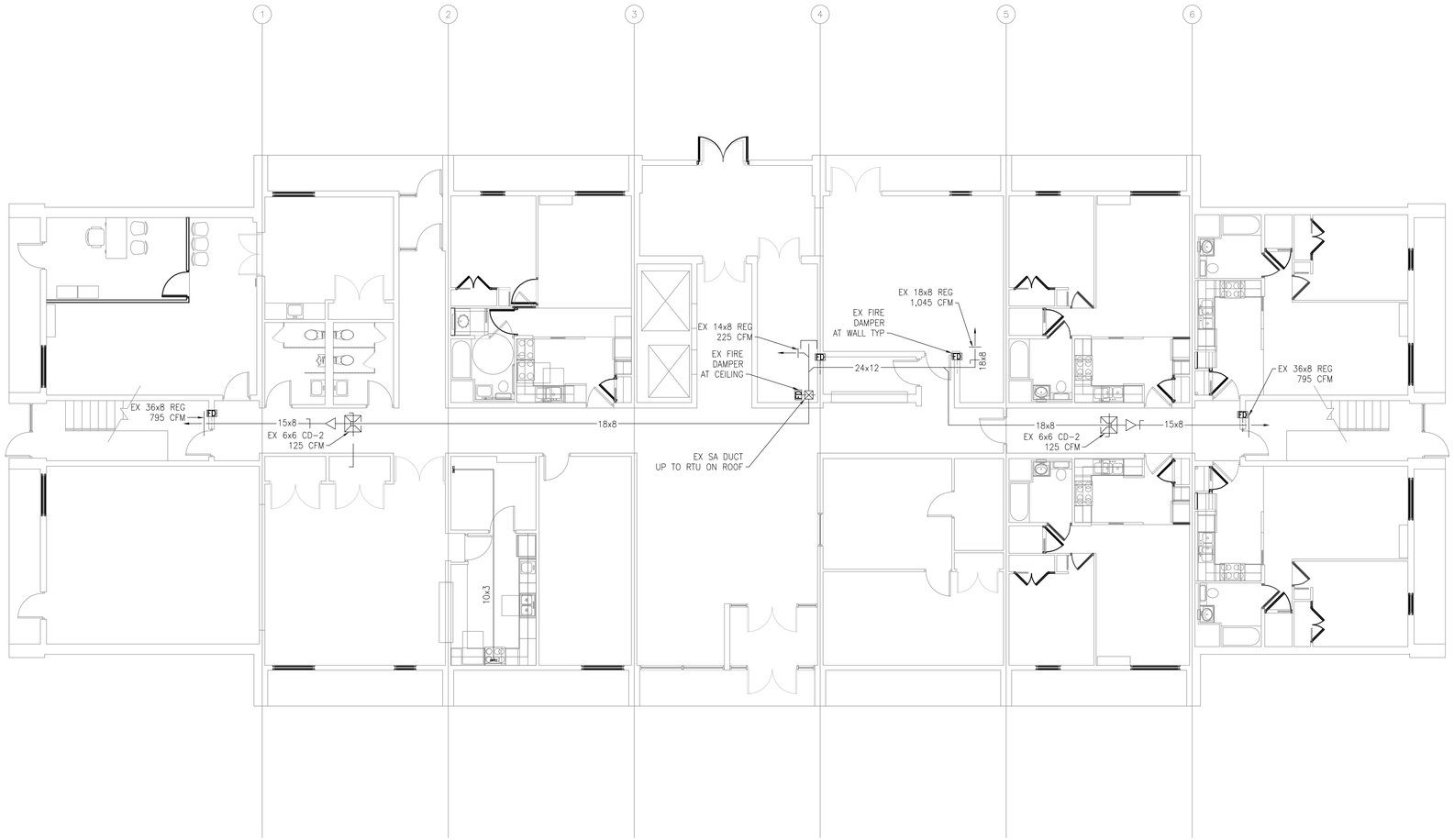

1 HVAC - FIRST FLOOR PLAN
M-101 SCALE: 1/8" = 1'-0"

RW SLEIGHTER
ENGINEERS & ARCHITECTS

1060 EBERLY WAY
LEMONT FURNACE, PA 15456
Phone 724.438.4010
Fax 724.438.4017
info@rwsleighter.com
WWW.RWSLEIGHTER.COM

CONFIDENTIAL - ALL RIGHTS RESERVED

SEAL

COMMONWEALTH OF PENNSYLVANIA
REGISTERED
PROFESSIONAL
JOHN J. SOLARCZYK
ENGINEER
No. 054230

PROJECT
LOYALHANNA APARTMENT RENOVATIONS
1111 JEFFERSON STREET
LATROBE, PENNSYLVANIA 15650

OWNER
WESTMORELAND COUNTY HOUSING AUTHORITY
154 S. GREENGATE ROAD
GREENSBURG, PENNSYLVANIA 15601

REVISION

NO.	DATE	DESCRIPTION

DATE:	PROJECT NUMBER
FEBRUARY 22, 2019	R17-077-04

DESIGNED	DRAWN	CHECKED
AAA	AAA	AAA

SHEET NAME
HVAC - FIRST FLOOR PLAN

SHEET NUMBER
M-101

P:\Pyramid Projects\18-63 WCHA Loyalhanna\HVAC\CAD\M-FP.dwg, Date: 2/22/2019 12:46:32 PM, Plotted By: LEETTA BELL

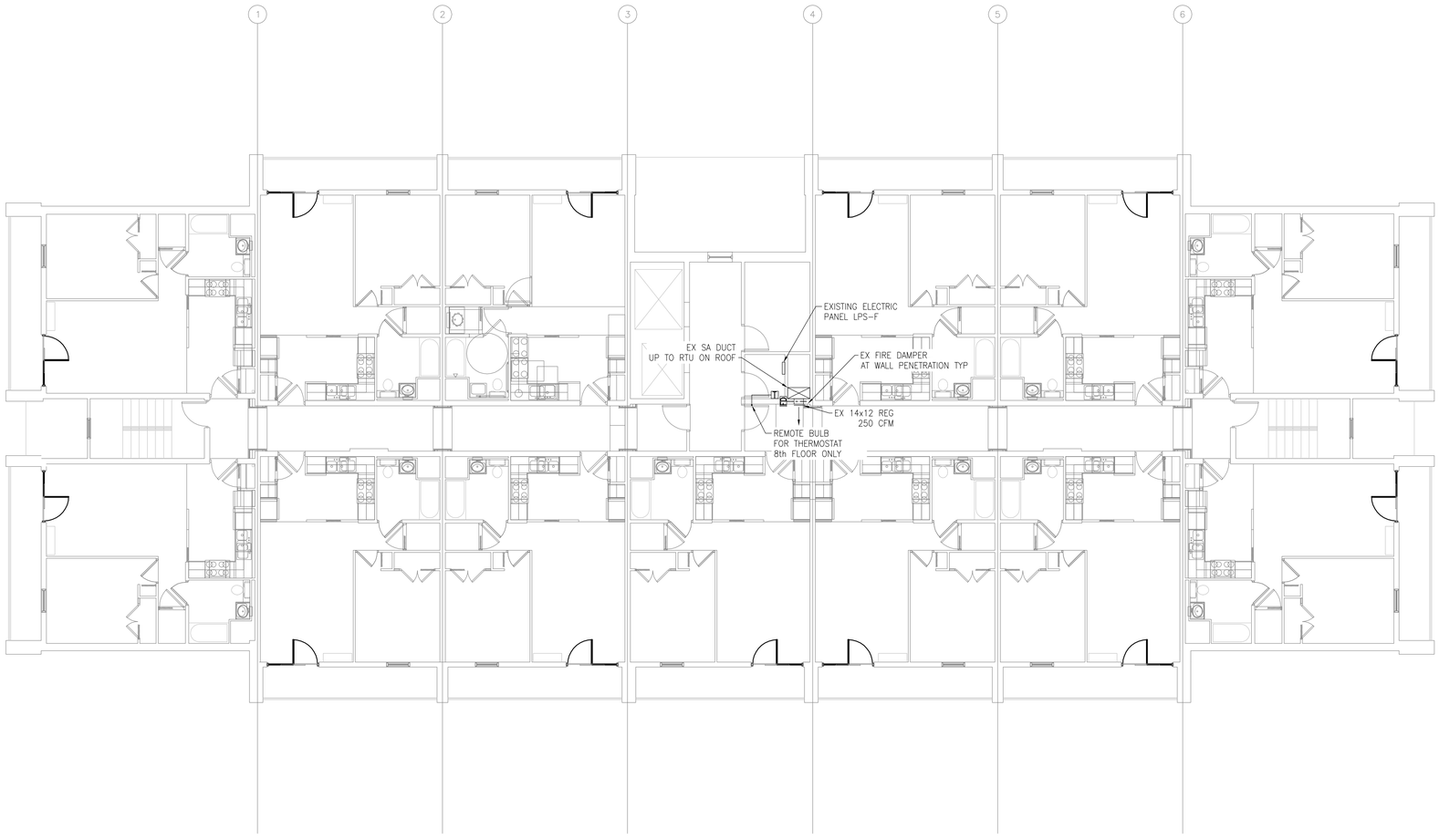

1 HVAC - 2ND-8TH FLOOR PLANS
M-102 SCALE: 1/8" = 1'-0"

RW SLEIGHTER
ENGINEERS & ARCHITECTS

1060 EBERLY WAY
LEMONT FURNACE, PA 15456
Phone 724.438.4010
Fax 724.438.4017
info@rwsleighter.com
WWW.RWSLEIGHTER.COM

CONFIDENTIAL - ALL RIGHTS RESERVED

SEAL

COMMONWEALTH OF PENNSYLVANIA
REGISTERED PROFESSIONAL
JOHN J. SOLARCZYK
ENGINEER
No. 054230

PROJECT
LOYALHANNA APARTMENT RENOVATIONS
1111 JEFFERSON STREET
LATROBE, PENNSYLVANIA 15650

OWNER
WESTMORELAND COUNTY HOUSING AUTHORITY
154 S. GREENGATE ROAD
GREENSBURG, PENNSYLVANIA 15601

REVISION

NO.	DATE	DESCRIPTION

DATE	PROJECT NUMBER
FEBRUARY 22, 2019	R17-077-04

DESIGNED	DRAWN	CHECKED
AAA	AAA	AAA

SHEET NAME
HVAC - 2ND-8TH FLOOR PLANS

SHEET NUMBER
M-102

P:\Pyramid\Projects\18-01 WCHA Loyalhanna\HVAC\CAD\A4-FP.dwg, Date: 2/22/2019 12:46:53 PM, Plotted By: LEETTA BELL

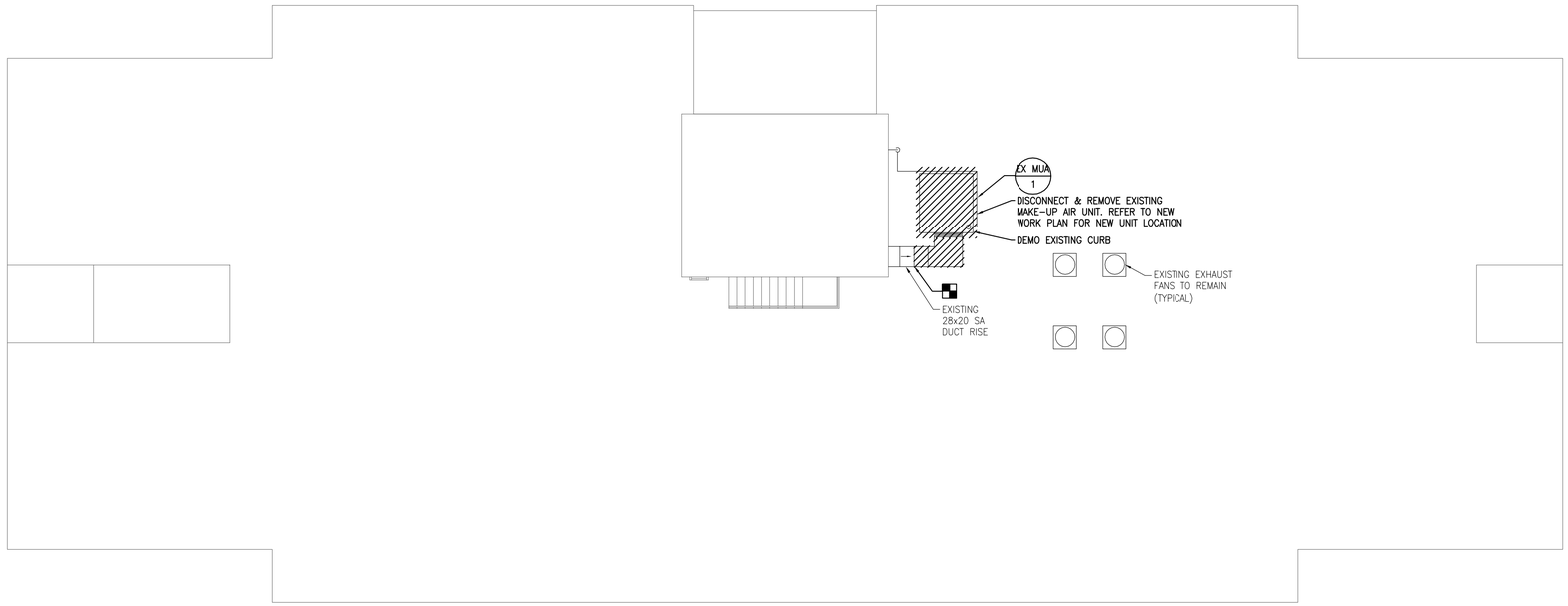

1 HVAC - ROOF PLAN - DEMOLITION
M-103 SCALE: 1/8" = 1'-0"

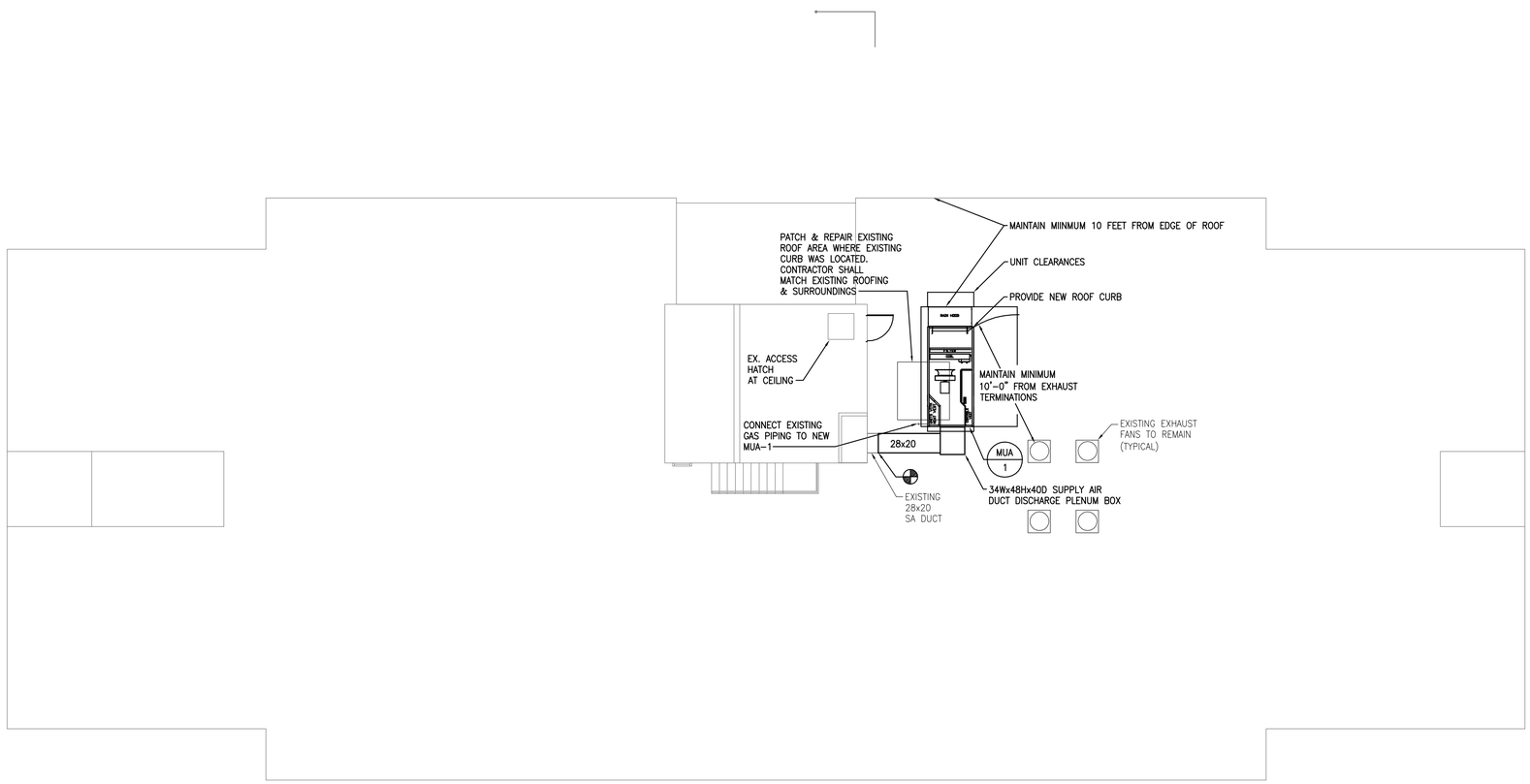

2 HVAC - ROOF PLAN
M-103 SCALE: 1/8" = 1'-0"

RW SLEIGHTER
ENGINEERS & ARCHITECTS
1060 EBERLY WAY
LEMONT FURNACE, PA 15456
Phone 724.438.4010
Fax 724.438.4017
info@rwsleighter.com
WWW.RWSLEIGHTER.COM

CONFIDENTIAL - ALL RIGHTS RESERVED

SEAL

COMMONWEALTH OF PENNSYLVANIA
REGISTERED PROFESSIONAL
JOHN J. SOLARCZYK
ENGINEER
NO. 054230-E

PROJECT
LOYALHANNA APARTMENT RENOVATIONS
1111 JEFFERSON STREET
LATROBE, PENNSYLVANIA 15650

OWNER
WESTMORELAND COUNTY HOUSING AUTHORITY
154 S. GREENGATE ROAD
GREENSBURG, PENNSYLVANIA 15601

REVISION

NO.	DATE	DESCRIPTION

DATE	PROJECT NUMBER
MAY 6, 2019	R17-077-04

DESIGNED	DRAWN	CHECKED
AAA	AAA	AAA

SHEET NAME
HVAC - ROOF PLANS

SHEET NUMBER
M-201

P:\Pyramid\Projects\18-61 WCHA Loyalhanna\HVAC\CAD\M4Plvcebd.dwg, Date: 5/6/2019 2:23:28 PM, Plotted By: ERIC HAUGH

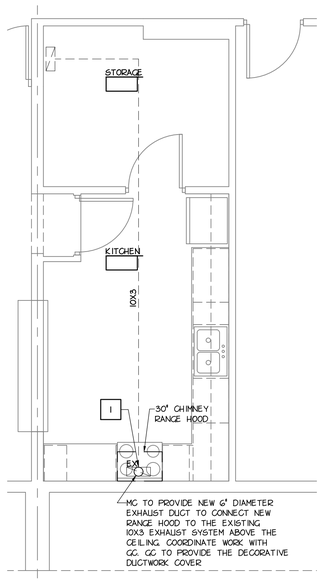

COMMUNITY ROOM KITCHEN - MECHANICAL PLAN

1 / M-101 SCALE: 1/4" = 1'-0"

PLAN NORTH

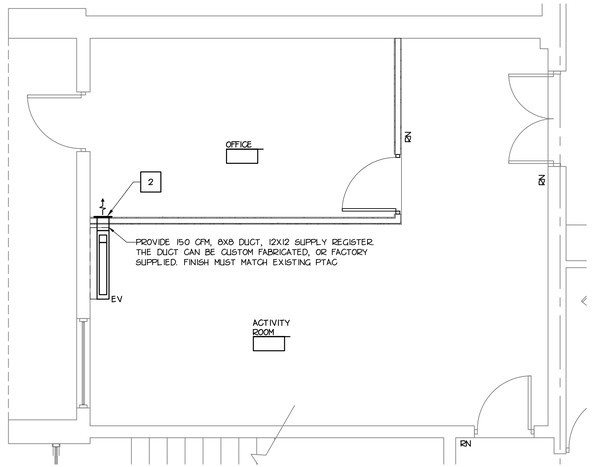

OFFICE/ACTIVITY ROOM - MECHANICAL PLAN

2 / M-101 SCALE: 1/4" = 1'-0"

PLAN NORTH

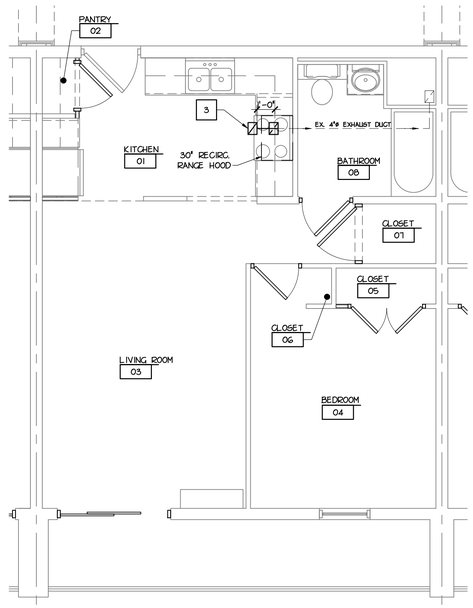

APARTMENT TYPE 'A' - MECHANICAL PLAN

3 / M-101 SCALE: 1/4" = 1'-0"

PLAN NORTH

LEGEND	
	EXHAUST AIR GRILL
	EXISTING EXHAUST AIR GRILL
	DUCT
	EXISTING DUCT

GENERAL NOTES

1. A PORTION OF EXISTING DUCTWORK IS SHOWN SHOWN IS FOR REFERENCE ONLY AND TAKEN FROM EXISTING DRAWINGS. FIELD VERIFY ALL EXISTING CONDITIONS TO ENSURE PROPER AND ADEQUATE CONNECTIONS ARE ACHIEVED BEFORE THE START OF ANY WORK. PROVIDE APPROPRIATE CLOSURE FOR ANY DUCTWORK THAT HAS BEEN REMOVED OR ABANDONED. RENOVATION OF EXISTING AREA TO INCLUDE TEST AND BALANCE OF EXISTING SYSTEM UPON COMPLETION OF WORK.
2. NEW EXHAUST GRILLS TO MATCH EXISTING IN STYLE AND FINISH.
3. ALL REQUIRED OPENINGS FOR MECHANICAL EQUIPMENT TO BE MADE BY MECHANICAL CONTRACTOR.
4. PRODUCTS SPECIFIED BY MANUFACTURER AND MODEL NUMBER ON THIS SHEET ARE DONE SO TO ESTABLISH A LEVEL OF QUALITY. SIMILAR PRODUCTS OF EQUAL QUALITY WILL BE CONSIDERED PER THE GENERAL CONDITIONS AND SPECIFICATIONS.
5. COORDINATE ALL MECHANICAL WORK WITH ALL OTHER TRADES TO ASSURE PROPER INSTALLATION AND AVOID INTERFERENCE. ANY ADDITIONAL PIPING, OFFSETS, ETC. REQUIRED SHALL BE PROVIDED AT NO ADDITIONAL COST OVER THE CONTRACT AMOUNT.
6. THE DRAWINGS ARE DIAGRAMMATIC, REFER TO ARCHITECTURAL DRAWINGS FOR DIMENSIONS AND DETAILS OF CONSTRUCTION.
7. ALL CONTRACTORS ARE RESPONSIBLE FOR THE ENTIRE BIDDING SET. WORK THAT IS INDICATED ON THE ARCHITECTURAL DRAWINGS TO BE COMPLETED BY SPECIFIC CONTRACTOR THEN THAT CONTRACTOR SHALL BE RESPONSIBLE FOR THAT WORK.
8. ALL DUCTWORK TO BE GALVANIZED SHEET METAL. ALL DUCTWORK SHALL BE FABRICATED TO SMACNA SHEET METAL STANDARDS. ALL DUCT JOINTS SHALL BE SEALED AIR TIGHT WITH A WATER RESISTANT FIRE RESISTIVE, CHEMICALLY COMPATIBLE WITH SEALANT AND MATING MATERIALS. DO NOT USE OIL BASE CAULKING, MASTICS OR GLAZING COMPOUNDS.

NUMBERED NOTES

1. GC TO PROVIDE CHIMNEY RANGE HOOD. MC TO EXTEND EXISTING EXHAUST DUCT AND MAKE REQUIRED TRANSITIONS TO CONNECT RANGE HOOD.
2. MC TO PROVIDE DUCT ADAPTER TO EXISTING UNIT VENTILATOR ALONG WITH DUCT EXTENSION AND REGISTER INTO OFFICE. MC TO MAKE PENETRATION THROUGH PARTITION WALL FOR EXTENSION. PROVIDE WALL SLEEVE AS REQUIRED BY MFGR. ENSURE AIRTIGHT SEAL AT ALL DUCTWORK. MATCH SIMILAR CONDITION AT EXISTING APARTMENTS. COORDINATE WITH GC.
3. MC TO REMOVE EXISTING CEILING EXHAUST GRILL. PROVIDE DUCT (MATCH EX. SIZE) AND CONNECTION TO EXISTING EXHAUST DUCT (4"ø). PROVIDE CEILING EXHAUST GRILL (MATCH EX. SIZE) LOCATED MIN. 12" FROM FRONT FACE OF UPPER WALL CABINETS. PROVIDE DUCT HANGERS, TRANSITIONS, BLOCKING, ETC. TO ENSURE AIRTIGHT CONNECTION. MC TO PATCH AND PAINT AREA OF EXISTING OPENING AT REMOVED CEILING GRILL TO MATCH FINISH OF ADJACENT GWB CEILING. LIMIT DISTURBANCE AND DAMAGE TO EXISTING CEILING. MC TO REPAIR ANY EXISTING CONDITIONS REMOVED OR DAMAGED AS PART OF THEIR WORK.

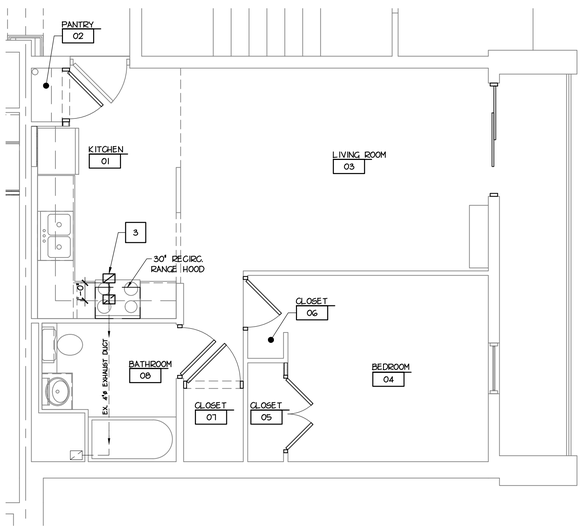

APARTMENT TYPE 'B' - MECHANICAL PLAN

4 / M-101 SCALE: 1/4"=1'-0"

PLAN NORTH

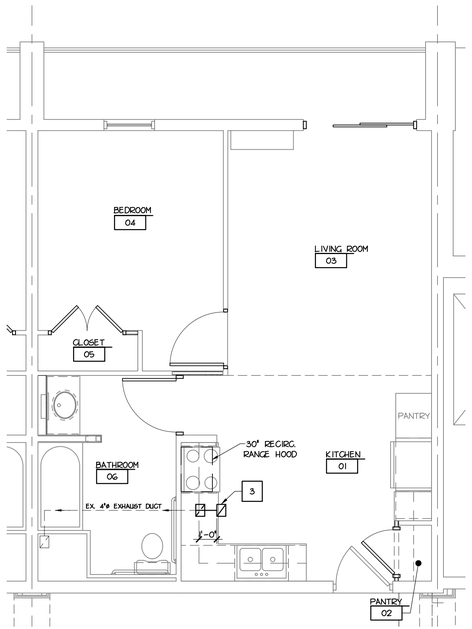

ACCESSIBLE APARTMENT - MECHANICAL PLAN

5 / M-101 SCALE: 1/4"=1'-0"

PLAN NORTH

RW SLEIGHTER
ENGINEERS & ARCHITECTS
1060 EBERLY WAY
LEMONT FURNACE, PA 15456
Phone 724.438.4010
Fax 724.438.4017
info@rwsleighter.com
WWW.RWSLEIGHTER.COM

CONFIDENTIAL - ALL RIGHTS RESERVED

SEAL

REGISTERED ARCHITECT COMMONWEALTH OF PENNSYLVANIA SCHROCK, RALPH

PROJECT
LOYALHANNA APARTMENT RENOVATIONS
1111 JEFFERSON STREET
LATROBE, PENNSYLVANIA 15650

OWNER
WESTMORELAND COUNTY HOUSING AUTHORITY
167 SOUTH GREENGATE ROAD
GREENSBURG, PENNSYLVANIA 15601

REVISION		
NO.	DATE	DESCRIPTION

DATE	PROJECT NUMBER
MAY 6, 2019	R17-077-04

DESIGNED	DRAWN	CHECKED
----	----	----

SHEET NAME
MECHANICAL - ENLARGED PLANS

SHEET NUMBER
M-301

P:\077 - Westmoreland County Housing Authority\R17-077-04 WCHA Loyalhanna\Dwg\Sheets\M-301.dwg, Date: 5/8/2019 4:05:22 PM, Plotted By: SEAN KEFFER

GENERAL NOTES

1. ALL ABOVE GROUND HORIZONTAL PIPING SHALL BE INSTALLED INSIDE THE WALL OR CHASE.
2. CONTRACTOR SHALL BE RESPONSIBLE FOR PROVIDING PLUMBING CONNECTIONS TO ALL ITEMS REQUIRING SUCH CONNECTIONS.
3. CONTRACTOR SHALL VERIFY QUANTITY, LOCATION, AND ROUGH-IN REQUIREMENTS FOR PLUMBING FIXTURES, EQUIPMENT, AND SPECIALTIES FURNISHED UNDER OTHER CONTRACTS AND BE RESPONSIBLE FOR THEIR INSTALLATION.
4. CONTRACTOR SHALL NOT RUN PIPING ABOVE ELECTRICAL PANELS OR EQUIPMENT. REFER TO THE ELECTRICAL DRAWINGS. COORDINATE WITH ELECTRICAL CONTRACTOR AND COMPLY WITH REQUIREMENTS SET FORTH IN NFPA 70.
5. CONTRACTOR SHALL BE RESPONSIBLE FOR MAINTAINING EXISTING SERVICES AND PROVIDING TEMPORARY SERVICES TO ALL PLUMBING FIXTURES AND EQUIPMENT REQUIRED TO REMAIN ACTIVE DURING CONSTRUCTION. WHERE WORK CAUSES DAMAGE TO AN EXISTING SYSTEM, THE CONTRACTOR SHALL REPAIR THE SERVICE IMMEDIATELY TO MAINTAIN SERVICE. REFER TO THE PHASING SCHEDULE.
6. EXISTING PIPING LOCATIONS AND SIZES WERE TAKEN FROM EXISTING DRAWINGS. CONTRACTOR SHALL VERIFY ACTUAL CONDITIONS IN FIELD BEFORE THE START OF ANY WORK.
7. WHERE EXISTING PIPING, DUCTWORK, CONDUIT, ETC. IS REQUIRED TO BE RELOCATED OR ADJUSTED FOR THE INSTALLATION OF NEW PLUMBING WORK, THE CONTRACTOR SHALL DO SO AT HIS EXPENSE.
8. CONTRACTOR SHALL VISIT SITE PRIOR TO SUBMITTING BID TO VERIFY EXISTING CONDITIONS AS THEY RELATE TO HIS WORK AND BE RESPONSIBLE FOR SUCH CONDITIONS. SUBMISSION OF BID WILL BE CONSIDERED ACKNOWLEDGMENT THAT THE CONTRACTOR HAS VISITED THE SITE AND HAS VERIFIED ALL EXISTING JOB CONDITIONS AND HAS INCLUDED ANY NECESSARY MODIFICATION TO EXISTING AND NEW WORK REQUIRED FOR INSTALLATION OF A COMPLETE AND WORKING SYSTEM.
9. PLUMBING CONTRACTOR TO MAKE GAS CONNECTION TO NEW MUA-1. REFER TO DRAWING M-103.

DEMOLITION NOTES

1. EXISTING PIPING, FIXTURES AND EQUIPMENT SHOWN ON THE DRAWINGS WERE TAKEN FROM EXISTING PLANS. THEY GENERALLY SHOW THE LOCATION AND SIZES OF SUCH ITEMS AND THOSE ITEMS WHICH ARE TO BE REMOVED. THE CONTRACTOR SHALL FIELD VERIFY ACTUAL CONDITIONS AND BE RESPONSIBLE FOR SUCH CONDITIONS.
2. CONTRACTOR SHALL REMOVE ALL EXISTING WATER, WASTE AND VENT PIPING NOT BEING UTILIZED BY THE NEW SYSTEMS INCLUDING HANGERS AND ACCESSORIES WHETHER THESE LINES ARE SHOWN OR NOT SHOWN ON THE DRAWINGS.
3. PIPING TO BE REMOVED SHALL BE REMOVED BACK TO THE MAIN AND CAPPED AT THERE.
4. CONTRACTOR SHALL PATCH EXISTING WALLS, FLOORS AND CEILINGS WHERE DAMAGED BECAUSE OF HIS WORK. WHERE NEW FINISHES ARE NOT BEING PROVIDED UNDER ANOTHER CONTRACT, THE FINISH SHALL BE PROVIDED UNDER THIS CONTRACT AND SHALL MATCH ADJACENT FINISHES. REFER TO THE ARCHITECTURAL FINISH SCHEDULE.
5. CONTRACTOR SHALL DISCONNECT ALL PLUMBING PIPING SERVING FIXTURES AND EQUIPMENT BEING REMOVED OR RELOCATED.
6. CONTRACTOR SHALL COORDINATE WITH OWNER BEFORE THE START OF DEMOLITION AS TO THE FIXTURES, SPECIALTIES AND EQUIPMENT THAT ARE TO BE TURNED OVER TO THE OWNER AFTER BEING REMOVED. THE CONTRACTOR SHALL EXERCISE EXTREME CARE IN REMOVING THESE ITEMS AS TO NOT DAMAGE THEM.

SYMBOL LEGEND

- SANITARY LINE
- VENT LINE
- COLD WATER LINE
- HOT WATER LINE
- EXISTING SANITARY LINE
- EXISTING WATER LINE
- EXISTING PIPING TO BE DEMOLISHED
- BALL VALVE
- CHECK VALVE
- STRAINER
- DIRECTION OF FLOW
- UNION
- FCO — FLOOR CLEANOUT
- EXT CO — EXTERIOR CLEANOUT
- WCO — WALL CLEANOUT
- CO — CLEANOUT
- P-TRAP
- SILL COCK OR HOSE BIBB
- PIPING TURNED UP
- PIPING TURNED DOWN
- PIPE CAP OR PLUG
- PIPING CONTINUED
- CONNECT TO EXISTING
- THERMOMETER
- RELIEF VALVE
- M — MOTOR CONNECTION (INCLUDES STARTER/DISCONNECT INSTALLATION)

ABBREVIATION LEGEND

ABV	ABOVE
ADA	AMERICANS WITH DISABILITIES ACT
AFF	ABOVE FINISHED FLOOR
AD	ACCESS DOOR
APT	APARTMENT
BLW	BELOW
BTC	BRANCH TO CONNECTION
CW OR C	COLD WATER
CLG	CEILING
CO	CLEANOUT
CONT'	CONTINUED / CONTINUATION
CTE	CONNECT TO EXISTING
CTR	COUNTER
DEMO	DEMOLISH
DN	DOWN
DP	DROP
DWH	DOMESTIC WATER HEATER
EC	ELECTRICAL CONTRACTOR
EL	ELEVATION
ET	EXPANSION TANK
EX	EXISTING
EXT	EXTERIOR
FCO	FLOOR CLEANOUT
FLR	FLOOR
GC	GENERAL CONTRACTOR
GPM	GALLONS PER MINUTE
H OR HW	HOT WATER
HB	HOSE BIBB
HC	HANDICAPPED
HD	HUB DRAIN
INV	INVERT
LAV OR L	LAVATORY
MFR	MANUFACTURER
MTD	MOUNTED
PC	PLUMBING CONTRACTOR
PRV	PRESSURE REDUCING VALVE
PSI	POUNDS PER SQUARE INCH
RS	RISE
S	SOIL
S	SINK
SAN	SANITARY
SS	SOIL STACK
SS	SERVICE SINK
TMV	THERMOSTATIC MIXING VALVE
TP	TRAP PRIMER
TYP	TYPICAL
V	VENT
VS	VENT STACK
VTR	VENT THROUGH ROOF
W	WASTE
WC	WATER CLOSET
WC	WALL CLEANOUT
WS	WASTE STACK
X/XX	DETAIL NUMBER / REFERENCED DRAWING

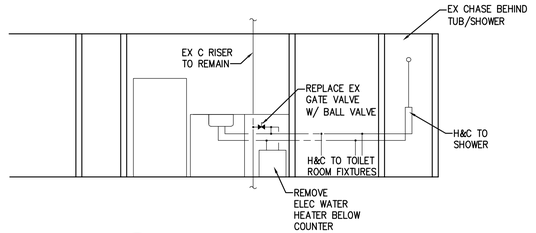

1 EXISTING PIPING ARRANGEMENT
P-001 SCALE: NONE

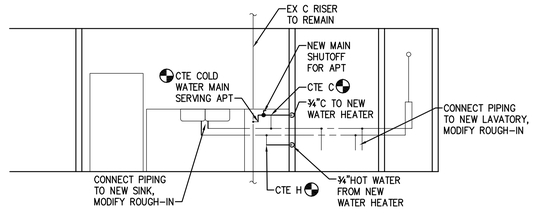

2 NEW PIPING ARRANGEMENT
P-001 SCALE: NONE

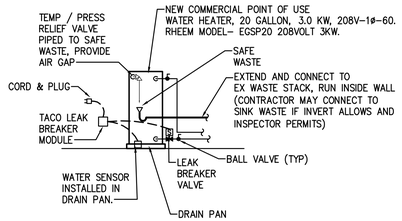

3 WATER HEATER SCHEMATIC
P-001 SCALE: NONE

RW SLEIGHTER
ENGINEERS & ARCHITECTS
1060 EBERLY WAY
LEMONT FURNACE, PA 15456
Phone 724.438.4010
Fax 724.438.4017
info@rwsleighter.com
WWW.RWSLEIGHTER.COM

CONFIDENTIAL - ALL RIGHTS RESERVED

SEAL

COMMONWEALTH OF PENNSYLVANIA
REGISTERED PROFESSIONAL
ERIC C. HAUGH
ENGINEER
NO. 055014-E
COMMONWEALTH OF PENNSYLVANIA

PROJECT
LOYALHANNA APARTMENT RENOVATIONS
1111 JEFFERSON STREET
LATROBE, PENNSYLVANIA 15650

OWNER
WESTMORELAND COUNTY HOUSING AUTHORITY
154 S. GREENGATE ROAD
GREENSBURG, PENNSYLVANIA 15601

REVISION

NO.	DATE	DESCRIPTION

DATE	PROJECT NUMBER
MAY 6, 2019	R17-077-04

DESIGNED	DRAWN	CHECKED
ECH	LLH	ECH

SHEET NAME
PLUMBING - NOTES, LEGENDS AND DETAILS

SHEET NUMBER
P-001

P:\Pyramid\Projects\1845 WCHA Loyalhanna\Plumbing\CAD\P-LPN-14EBID.dwg, Date: 5/9/2019 12:27:02 PM, Plotted By: ERIC HAUGH

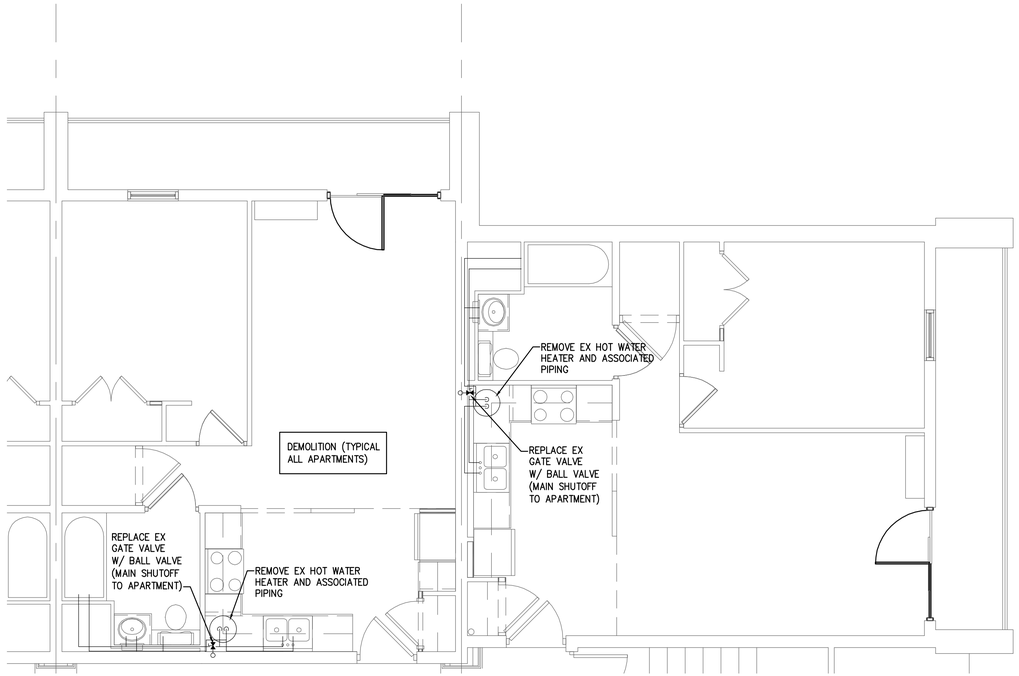

1 PLUMBING - LARGE SCALE DEMOLITION PLAN
P-201 SCALE: 1/4" = 1'-0"

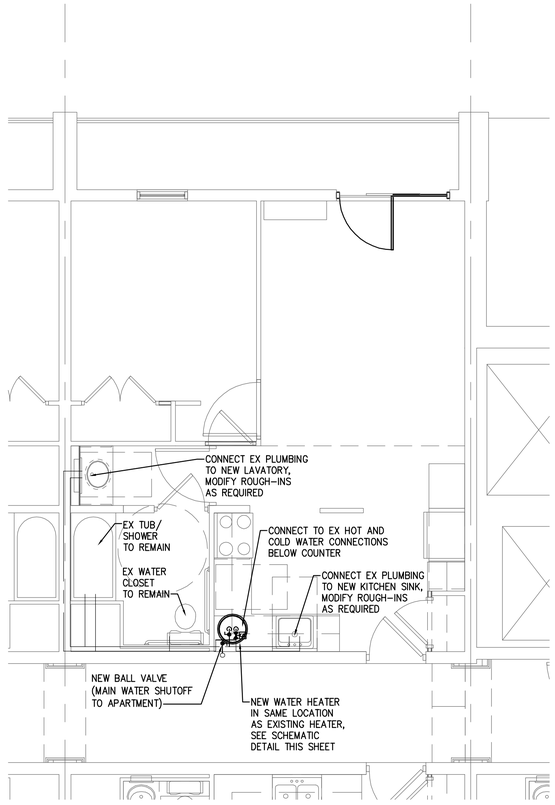

3 PLUMBING - LARGE SCALE PLAN ADA UNIT
P-201 SCALE: 1/4" = 1'-0"

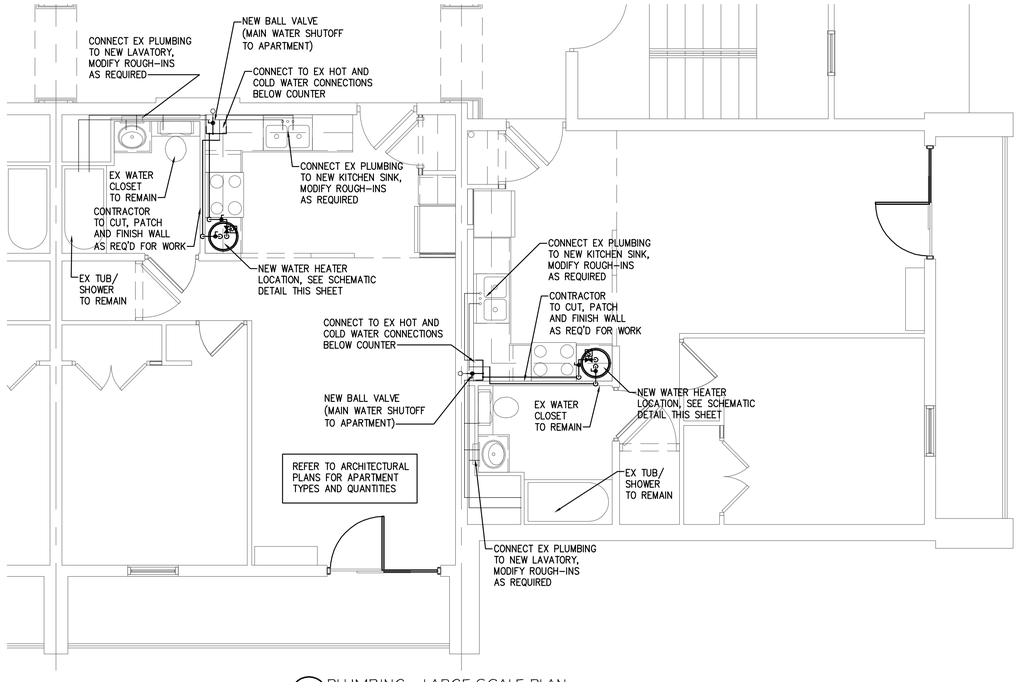

2 PLUMBING - LARGE SCALE PLAN
P-201 SCALE: 1/4" = 1'-0"

RW SLEIGHTER
ENGINEERS & ARCHITECTS
1060 EBERLY WAY
LEMONT FURNACE, PA 15456
Phone 724.438.4010
Fax 724.438.4017
info@rwsleighter.com
WWW.RWSLEIGHTER.COM

CONFIDENTIAL - ALL RIGHTS RESERVED

SEAL

COMMONWEALTH OF PENNSYLVANIA
REGISTERED PROFESSIONAL
ERIC C. HAUGH
ENGINEER
NO. 065814-E

PROJECT
LOYALHANNA APARTMENT RENOVATIONS
1111 JEFFERSON STREET
LATROBE, PENNSYLVANIA 15650

OWNER
WESTMORELAND COUNTY HOUSING AUTHORITY
154 S. GREENGATE ROAD
GREENSBURG, PENNSYLVANIA 15601

REVISION

NO.	DATE	DESCRIPTION

DATE	PROJECT NUMBER
MAY 6, 2019	R17-077-04

DESIGNED	DRAWN	CHECKED
ECH	LLH	ECH

SHEET NAME
PLUMBING PLANS

SHEET NUMBER
P-201

P:\Pyramid\Projects\18-61 WCHA Loyalhanna\Plumbing\CAD\P-TP-1-REBID.dwg, Date: 5/7/2019 11:30:37 AM, Plotted By: ERIC HAUGH

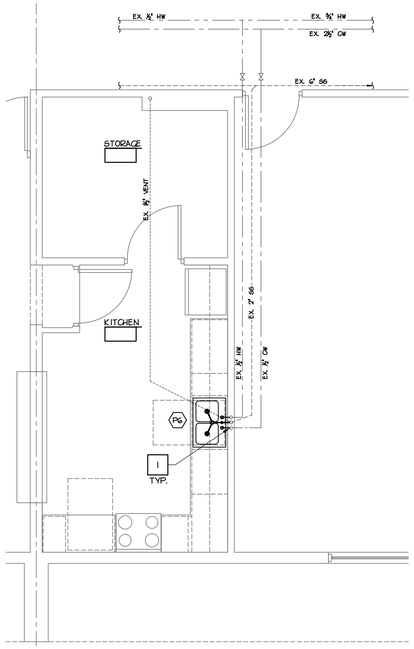

1 P-301 COMMUNITY ROOM KITCHEN - PLUMBING PLAN

SCALE: 1/4" = 1'-0"

PLAN NORTH

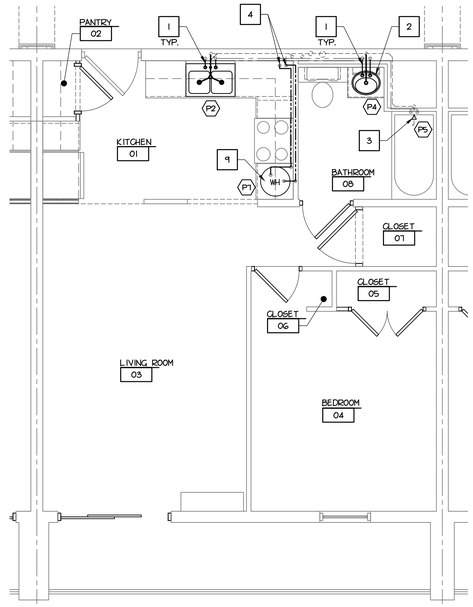

2 P-301 APARTMENT TYPE 'A' - PLUMBING PLAN

SCALE: 1/4" = 1'-0"

PLAN NORTH

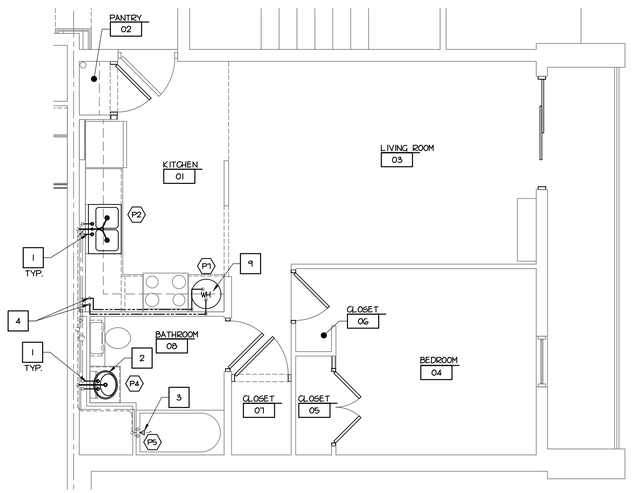

3 P-301 APARTMENT TYPE 'B' - PLUMBING PLAN

SCALE: 1/4"-1'-0"

PLAN NORTH

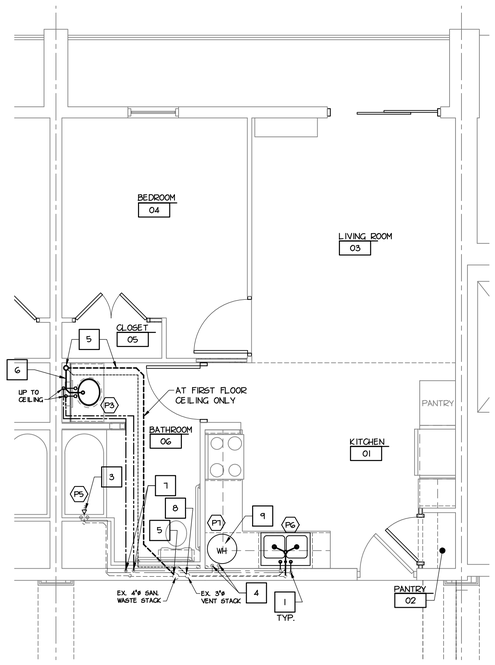

4 P-301 ACCESSIBLE APARTMENT - PLUMBING PLAN

SCALE: 1/4"-1'-0"

PLAN NORTH

LEGEND

	COLD WATER PIPE (CW)
	EXISTING COLD WATER PIPE (CW)
	HOT WATER PIPE (HW)
	EXISTING HOT WATER PIPE (HW)
	VENT PIPE
	EXISTING VENT PIPE
	SANITARY PIPE
	EXISTING SANITARY PIPE
~	PIPE CONTINUES

PLUMBING NOTES

1. INSTALLATION AND MATERIALS OF THE PLUMBING SYSTEM SHALL CONFORM TO THE REQUIREMENTS OF THE PENNSYLVANIA UNIFORM CONSTRUCTION CODE AND THE CONTRACT SPECIFICATIONS.
2. EXCEPT WHERE INDICATED, HORIZONTAL DRAINAGE PIPING SHALL SLOPE AT ½" PER FOOT FOR 1-1/2" PIPES, ¼" PER FOOT FOR 2" PIPES, AND ⅛" PER FOOT FOR PIPES 3" OR LARGER.
3. THE DRAWINGS ARE DIAGRAMMATIC, REFER TO ARCHITECTURAL DRAWINGS FOR DIMENSIONS AND DETAILS OF CONSTRUCTION.
4. PRODUCTS SPECIFIED BY MANUFACTURER AND MODEL NUMBER ON THIS SHEET ARE DONE SO TO ESTABLISH A LEVEL OF QUALITY. SIMILAR PRODUCTS OF EQUAL QUALITY WILL BE CONSIDERED PER THE GENERAL CONDITIONS AND SPECIFICATIONS.
5. PC SHALL VERIFY THE LOCATION OF ALL EXISTING UTILITIES PRIOR TO START OF WORK.
6. A PORTION OF EXISTING PLUMBING CONDITIONS SHOWN IS FOR REFERENCE ONLY AND TAKEN FROM EXISTING DRAWINGS. EXISTING FIXTURES AND EQUIPMENT LOCATIONS AND SIZES ARE TAKEN FROM EXISTING DRAWINGS. FIELD VERIFY ALL EXISTING CONDITIONS TO ENSURE PROPER AND ADEQUATE CONNECTIONS ARE ACHIEVED BEFORE THE START OF ANY WORK.
7. PC TO INSTALL ALL FIXTURES PER THE MANUFACTURER SPECIFICATIONS.
8. PC TO PROVIDE NEW SHUT-OFF VALVES WITHIN SUPPLY LINES AT ALL PLUMBING FIXTURES (NEW SINKS/LAVS, EXISTING TOILETS) AND AT NEW CONNECTIONS TO EXISTING LINES. PROVIDE TRAP AT DRAIN LINE AS PART OF NEW WORK.
9. ALL WATER SUPPLY (HOT & COLD) TO BE INSTALLED WITHIN PLUMBING CHASE BY PC.
10. ALL SANITARY PIPING SHALL BE SCH.40 PVC ALONG WITH FITTINGS, TRAPS, ETC. BY PC.
11. ALL SUPPLY PIPING SHALL BE COPPER ALONG WITH FITTINGS, VALVES, ETC. BY PC.
12. PC TO PROVIDE PROTECTIVE COVER ON ALL EXPOSED SUPPLY AND DRAIN LINES IN APARTMENTS 208, 308, 408, 508, 608, 708 AND 808 (ACCESSIBLE).
13. PC TO INSTALL NEW PLUMBING FIXTURES, PIPING, VENTS AND DRAINS PER PLUMBING FIXTURE SCHEDULE ON THIS SHEET.
14. WHERE WALLS ARE CMU WITH PLASTER AND INSTALLATION IN EXISTING WALLS IS NOT AVAILABLE, PIPES BY PC ARE TO BE CONCEALED BEHIND CASEWORK.
15. PC TO PAINT ALL VISIBLE PIPES WHICH PENETRATE THROUGH THE INTERIOR AND EXTERIOR WALLS.
16. PC TO DISCONNECT AND REMOVE EXISTING PLUMBING FIXTURES, PIPING AND APPURTENANCES IN THE APARTMENTS WITHIN THE BUILDING AS INDICATED ON THE PLANS. SEE A-G01, A-G02, A-G03, A-G04 FOR DEMOLITION PLANS.
17. ALL WATER SUPPLY PIPE SHALL BE ¾" RIGID COPPER, EXCEPT INDIVIDUAL FIXTURE RUNS. PC TO INSTALL NEW PLUMBING FIXTURES, PIPING, VENTS AND DRAINS PER PLUMBING FIXTURE SCHEDULE AND COORDINATE WITH FIXTURE MANUFACTURER REQUIREMENTS.
18. ALL CONTRACTORS ARE RESPONSIBLE FOR THE ENTIRE BIDDING SET. WORK THAT IS INDICATED ON THE ARCHITECTURAL DRAWINGS TO BE COMPLETED BY SPECIFIC CONTRACTOR THEN THAT CONTRACTOR SHALL BE RESPONSIBLE FOR THAT WORK.
19. PC TO PATCH ALL ABANDONED OPENING IN THE FLOOR SLAB. ENSURE THAT INFILL PROVIDES CONT. FIRE-RATING FOR FLOOR.
20. PC TO HOOK UP GAS TO (MAU-1) MAKE UP AIR UNIT.

NUMBERED NOTES

1. PC TO PROVIDE CONNECTIONS TO EXISTING SUPPLY, DRAIN AND VENT PIPE AT EXISTING PLUMBING CHASE, WALL, FLOOR OR CEILING. LIMIT DISTURBANCE AND DAMAGE TO EXISTING WALLS, CEILINGS AND FLOORS. PATCH AREA OF REMOVAL TO MATCH EXISTING ADJACENT AS PART OF NEW WORK.
2. PC TO FURNISH SINGLE BATHROOM DROP-IN SINK. GC TO INSTALL BATHROOM BASE VANITY CABINET/COUNTERTOP. PC TO INSTALL SINK. PC TO PROVIDE CONNECTIONS TO EXISTING SUPPLY, DRAIN AND VENT PIPE AT EXISTING PLUMBING CHASE. REFER TO NOTE 1.
3. PC TO INSTALL NEW SHOWER HEAD. EXISTING SHOWER ARM & WALL FLANGE TO REMAIN.
4. HOT & COLD WATER SUPPLY CONNECTION - REFER TO P-201 AND P-202 FOR PIPING ARRANGEMENT INFORMATION.
5. PC TO PROVIDE 3"ø WASTE STACK PIPING FROM 2ND TO 8TH FLOORS. PC TO BORE HOLE IN EXISTING CONCRETE FLOOR. PROVIDE CONTINUOUS FIRE SEALANT AROUND PIPE. PC TO PROVIDE 3"ø WASTE PIPING FROM NEW WASTE STACK TO EXISTING 4"ø WASTE STACK WITHIN CEILING OF FIRST FLOOR. PATCH EXISTING CEILING TO ENSURE SEAMLESS TRANSITION UPON COMPLETION OF PLUMBING CONNECTIONS. LIMIT DISTURBANCE AND DAMAGE TO ADJACENT CORRIDOR WALLS. PATCH AND REPAIR ANY AREA DAMAGED AS PART OF NEW WORK.
6. PC TO PROVIDE CONNECTION BETWEEN SINK AND WASTE STACK VENT. REFER TO PLUMBING FIXTURE CONNECTION SCHEDULE FOR CONNECTION SIZE. PROVIDE PROTECTIVE COVER ON ALL EXPOSED DRAIN LINES.
7. PC TO PROVIDE SUPPLY PIPING TO SINK IN CEILING ON FIRST THRU 8TH FLOORS. REMOVE PORTION OF EXISTING GWB ON CEILING AND WALLS FOR PIPING AND CONNECTION TO EXISTING SUPPLY PIPING. PROVIDE VALVES AT ALL NEW TO EXISTING CONNECTIONS AND AT FIXTURE. REFER TO PLUMBING FIXTURE CONNECTION SCHEDULE FOR CONNECTION SIZE. PATCH EXISTING CEILING AND WALL TO ENSURE SEAMLESS TRANSITION UPON COMPLETION OF PLUMBING CONNECTIONS. LIMIT DISTURBANCE AND DAMAGE TO ADJACENT CEILING AND WALLS. PATCH AND REPAIR ANY AREA DAMAGED AS PART OF NEW WORK.
8. PC TO CONNECT VENT PIPING TO NEAREST EXISTING VENT STACK ABOVE THE 8TH FLOOR CEILING. REMOVE PORTION OF EXISTING GWB ON CEILING AND WALLS FOR VENT PIPING AND CONNECTION TO EXISTING VENT STACK. PATCH EXISTING CEILING AND WALL TO ENSURE SEAMLESS TRANSITION UPON COMPLETION OF PLUMBING CONNECTIONS. LIMIT DISTURBANCE AND DAMAGE TO ADJACENT CEILING AND WALLS. PATCH AND REPAIR ANY AREA DAMAGED AS PART OF NEW WORK.
9. PC TO INSTALL NEW WATER HEATER IN LOCATION SHOWN ON DRAWINGS. PC TO CONNECT EXISTING HOT AND COLD WATER CONNECTIONS BELOW COUNTER.. PC TO PROVIDE NEW BALL VALVE AT MAIN WATER SHUT OFF. CONTRACTOR TO CUT PATCH AND FINISH WALL AS REQUIRED FOR WORK. REFER TO DETAIL 3/P-001 FOR WATER HEATER SCHEMATIC

PLUMBING FIXTURE CONNECTION SCHEDULE

ITEM	FIXTURE DESCRIPTION	FIXTURE CONNECTION SIZE TRAP	WASTE	VENT	C.W.	H.W.	REMARKS
P1	NOT USED	--	--	--	--	--	CONNECT TO EXISTING PLUMBING LINES
P2	DOUBLE BOWL KITCHEN SINK	1-1/2"	2"	1-1/2"	1/2"	1/2"	CONNECT TO EXISTING PLUMBING LINES
P3	LAVATORY, ACCESSIBLE	1-1/4"X1-1/2"	2"	1-1/4"	1/2"	1/2"	CONNECT TO EXISTING PLUMBING LINES
P4	LAVATORY	1-1/4"X1-1/2"	2"	1-1/4"	1/2"	1/2"	CONNECT TO EXISTING PLUMBING LINES
P5	SHOWER HEAD	--	--	--	--	--	CONNECT TO EXISTING SHOWER ARM
P6	DOUBLE BOWL KITCHEN SINK, ACCESSIBLE	1-1/2"	2"	1-1/2"	1/2"	1/2"	CONNECT TO EXISTING PLUMBING LINES
P7	HOT WATER HEATER	--	--	--	--	--	CONNECT TO EXISTING PLUMBING LINES

RW SLEIGHTER
ENGINEERS & ARCHITECTS
1060 EBERLY WAY
LEMONT FURNACE, PA 15456
Phone 724.438.4010
Fax 724.438.4017
info@rwsleighter.com
WWW.RWSLEIGHTER.COM

CONFIDENTIAL - ALL RIGHTS RESERVED

SEAL

REGISTERED ARCHITECT COMMONWEALTH OF PENNSYLVANIA SCHROCK, RAYMOND

PROJECT
LOYALHANNA APARTMENT RENOVATIONS
1111 JEFFERSON STREET
LATROBE, PENNSYLVANIA 15650

OWNER
WESTMORELAND COUNTY HOUSING AUTHORITY
167 SOUTH GREENGATE ROAD
GREENSBURG, PENNSYLVANIA 15601

REVISION

NO.	DATE	DESCRIPTION

DATE: MAY 6, 2019
PROJECT NUMBER: R17-077-04
DESIGNED: ---- DRAWN: ---- CHECKED: ----

SHEET NAME
PLUMBING - ENLARGED PLANS

SHEET NUMBER
P-301

P-077 - Westmoreland County Housing Authority R17-077-04 - WCHA Loyalhanna\Dwg\Sheets\P-301.dwg, Date: 5/6/2019 4:06:13 PM, Plotted By: SEAN KEFFER

DRAWING NOTES

1. REFER TO SHEET E-302 FOR ELECTRICAL NOTES, ELECTRICAL FIXTURE SCHEDULE AND ELECTRICAL NUMBERED NOTES.

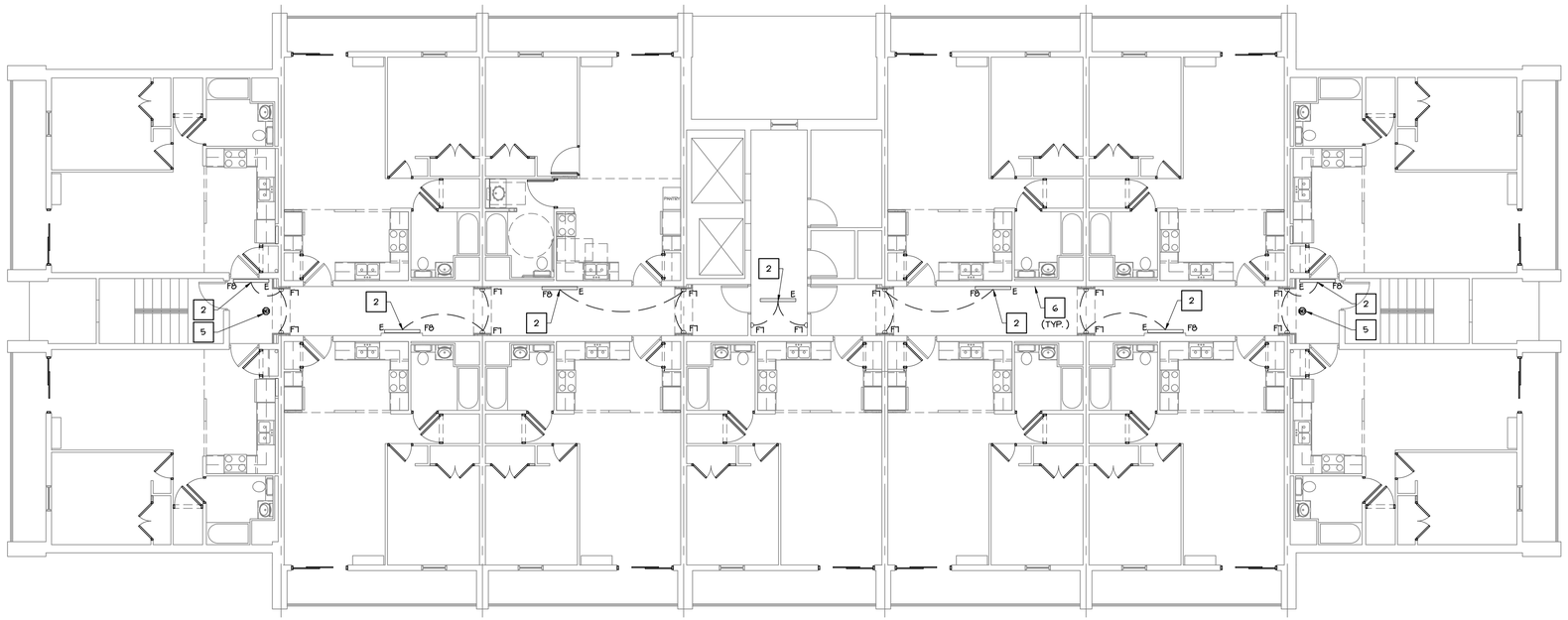

1 / E-301 TYPICAL FLOOR (2 THROUGH 8 FLOORS) - LIGHTING & POWER PLAN
SCALE: 1/8" = 1'-0"

NORTH

RW SLEIGHTER
ENGINEERS & ARCHITECTS
1060 EBERLY WAY
LEMONT FURNACE, PA 15456
Phone 724.438.4010
Fax 724.438.4017
info@rwsleighter.com
WWW.RWSLEIGHTER.COM

CONFIDENTIAL - ALL RIGHTS RESERVED

SEAL

REGISTERED ARCHITECT
PENNSYLVANIA
KENNETH F. SCHROCK RA014733X

PROJECT
LOYALHANNA APARTMENT RENOVATIONS
1111 JEFFERSON STREET
LATROBE, PENNSYLVANIA 15650

OWNER
WESTMORELAND COUNTY HOUSING AUTHORITY
167 SOUTH GREENGATE ROAD
GREENSBURG, PENNSYLVANIA 15601

REVISION

NO.	DATE	DESCRIPTION

DATE	PROJECT NUMBER
MAY 6, 2019	R17-077-04

DESIGNED	DRAWN	CHECKED
----	----	----

SHEET NAME
ELECTRICAL - LIGHTING & POWER PLAN

SHEET NUMBER
E-301

P:\077 - Westmoreland County Housing Authority\R17-077-04 - WCHA Loyalhanna\Dwg\Sheets\E-301.dwg, Date: 5/8/2019 4:06:36 PM, Plotted By: SEAN KEFFER

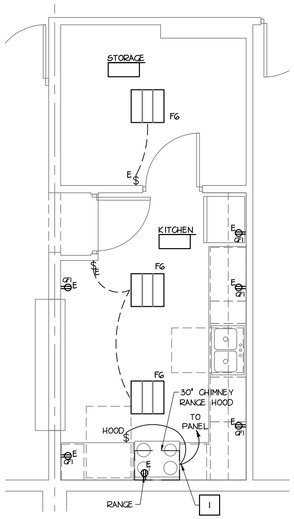

1 E-302 COMMUNITY ROOM KITCHEN - LIGHTING & POWER PLAN

SCALE: 1/4" = 1'-0"

PLAN NORTH

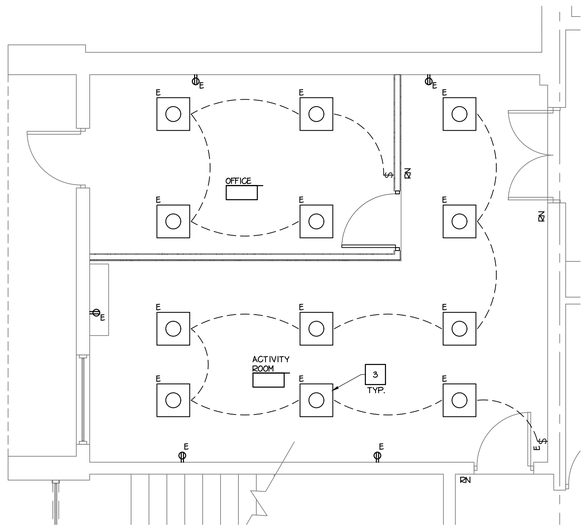

2 E-302 OFFICE/ACTIVITY ROOM - LIGHTING & POWER PLAN

SCALE: 1/4" = 1'-0"

PLAN NORTH

LIGHTING FIXTURE SCHEDULE

ITEM NUMBER	MANUFACTURER	DESCRIPTION	MODEL NUMBER	REMARKS
F1	METALUX	CLG. MOUNTED LED FIXTURE	FMLED20WH840PR2	
F2	EGLO - GRAFIK	LED WALL SCONCE	90463A	
F3	HALO	RECESSED LED FIXTURE	SLD405035WHJB	
F4	METALUX	CLG. MOUNTED LED FIXTURE	FMLED12WH840PR2	
F5	LITHONIA	LED WALL MOUNTED VANITY FIXTURE	FMVCGL 24IN MVOLT 30K 90CRI BN	MOUNT CENTER OF FIXTURE AT 6' ABOVE MIRROR
FG	COOPER	2X2 LED FIXTURE	2822R-2-L35-ESTG-UNV-STD-IC-95N	
F1	INCON	LED WALL SCONCE	21712	
FB	CORELITE	WALL MOUNTED LED DIRECT/INDIRECT	JW-WM-2L35-IC-UNV-SU-WA-4'	

NOTES:
1. MANUFACTURER AND MODEL GIVEN FOR REFERENCE ONLY.

ELECTRICAL LEGEND

	EXISTING TENANT PANEL
	2X2 LED FIXTURE
E	EXISTING 2X2 FIXTURE (EXISTING FIXTURE IN NEW CEILING)
E	LED WALL SCONCE (WHERE INDICATED ON PLAN, E = NEW FIXTURE AT EXISTING LOCATION)
E	LED WALL MOUNTED VANITY FIXTURE (WHERE INDICATED ON PLAN, E = NEW FIXTURE AT EXISTING LOCATION)
E	LED SURFACE MOUNTED FIXTURE (WHERE INDICATED ON PLAN, E = NEW FIXTURE AT EXISTING LOCATION)
E	LED SURFACE MOUNTED FIXTURE (WHERE INDICATED ON PLAN, E = NEW FIXTURE AT EXISTING LOCATION)
	DUPLEX RECEPTACLE (WHERE INDICATED ON PLAN, E = NEW RECEPTACLE & COVER AT EXISTING LOCATION)
GFI	DUPLEX RECEPTACLE (GROUND FAULT) (WHERE INDICATED ON PLAN, E = NEW RECEPTACLE & COVER AT EXISTING LOCATION)
	CIRCUIT - PROVIDE CONDUIT FROM SWITCH TO FIXTURE
$	WALL SWITCH
$E	REPLACE EXISTING WALL SWITCH & COVER - RELOCATE AS INDICATED ON PLAN
ECS	EMERGENCY CALL STATION
SD	SMOKE DETECTOR (NEW UNIT, NEW LOCATION, EXISTING CIRCUIT)
SDE	SMOKE DETECTOR (EXISTING LOCATION, NEW UNIT)
SDS	SMOKE DETECTOR/STROBE UNIT
FE	FIRE ALARM STROBE UNIT

NUMBERED ELECTRICAL NOTES

1. EC TO PROVIDE CONNECTION TO RANGE HOOD.
2. EC TO PROVIDE CONNECTION TO LIGHT FIXTURES FROM NEAREST EXISTING LIGHT FIXTURE. PROVIDE JUNCTION BOX AT EXISTING FIXTURE AND CONNECT CONDUIT TO SUPPLY EACH LIGHT FIXTURE. EC TO PATCH AND REPAIR EXISTING WALL AREA DISTURBED OR DAMAGED AS PART OF NEW WORK.
3. EC TO INSTALL EXISTING LIGHT FIXTURES IN NEW CEILING. PROVIDE CONNECTION BETWEEN LIGHTS AND LIGHT SWITCHES AS PART OF NEW WORK.
4. EC TO RELOCATED EXISTING EMERGENCY CALL STATION. PROVIDE NEW ELECTRIC BOX AND FACE PLATE COVER.
5. EC TO RELOCATE EXISTING SMOKE DETECTORS (8TH FLOOR ONLY) TO ENSURE NO INTERFERENCE WITH NEW PILASTERS.
6. EC TO UTILIZE 'VOID' AREA BETWEEN WALL AND HANDRAIL BOARD TO CONCEAL CONDUIT FOR CONNECTION OF NEW WALL SCONCES. SEE DETAIL 13/A-101.
7. EC TO PROVIDE CONNECTION TO ELECTRIC WATER HEATER, WATER SENSOR, & LEAK BREAKER MODULE. SEE P-001 AND P-201
8. EC TO PROVIDE RECEPTACLE BELOW COUNTERTOP IN ACCESSIBLE APARTMENT AND INSIDE PANTRY CABINET IN TYPICAL APARTMENT

ELECTRICAL NOTES

1. ELECTRICAL CONTRACTOR SHALL BE RESPONSIBLE FOR VERIFYING EXISTING AND PROPOSED ELECTRICAL CIRCUITS FOR LOAD AND CAPACITY. EC IS RESPONSIBLE FOR ENTIRE BID DOCUMENT SET. ELECTRICAL WORK INDICATED ON OTHER DRAWINGS ARE THE RESPONSIBILITY OF THE EC.
2. EC TO MAKE ELECTRICAL CONNECTIONS TO RANGE HOOD (AT ALL APARTMENTS), AND INSTALL SWITCHES (SWITCH FOR FAN, SWITCH FOR LIGHT) IN FACE OF BASE CABINET AT ALL ACCESSIBLE UNITS.
3. EC TO PROVIDE GFI PROTECTION ON ALL RECEPTACLES AT KITCHEN COUNTERTOP.
4. EC TO CONNECT NEW LIGHTING TO EXISTING LIGHT CIRCUIT AND SWITCHES. FIELD VERIFY LOCATION. USE EXISTING ROUGH-IN LOCATIONS IN THE EXISTING BUILDING WHERE POSSIBLE.
5. EC TO PROVIDE OUTLET FOR REFRIGERATOR. EXISTING CIRCUIT TO NEW LOCATION AS INDICATED ON PLAN.
6. EC SHALL DEVISE, EXTEND, AND AMEND EXISTING ELECTRICAL CIRCUITS TO ACCOMMODATE PROPOSED CIRCUITS.
7. REMOVE ALL ELECTRICAL APPURTENANCES (BOXES, WIRING, ETC.) NOT REQUIRED FOR EXISTING ELECTRICAL CIRCUITS OR COMPLETION OF PROPOSED ELECTRICAL WORK.
8. ELECTRICAL CONTRACTOR SHALL VERIFY AMPERAGE TO ALL EQUIPMENT AND SIZE BREAKERS ACCORDINGLY.
9. ELECTRICAL WIRING DEPICTED IS FOR INSTALLATION OF NEW ELECTRICAL WIRING. SHOULD EXISTING WIRING, SYSTEM OR DEVICE BE ACCESSIBLE TO THE EC AND SUITABLE FOR USE, EC SHALL CREDIT VALUE OF PROPOSED WORK NOT REQUIRED TO THE HOUSING AUTHORITY.
10. ELECTRICAL CONTRACTOR TO PROVIDE NEW SWITCHES, RECEPTACLES AND COVER PLATES IN EXISTING WALL AS INDICATED ON FLOOR PLANS. COLOR AS SELECTED BY OWNER/ARCHITECT. PATCH & PAINT AREA OF EXISTING WALL DISTURBED FOR INSTALLATION TO MATCH EXISTING ADJACENT WALLS. USE OF SURFACE RACEWAY IS ACCEPTABLE WHERE NO EXISTING ROUGH IN LOCATION IS AVAILABLE ON EXISTING WALLS (IE PLASTER ON CMU WALLS). EC TO PROVIDE CONTINUOUS CIRCUIT FOR NEW WORK WHEN OUTLET ON SAME CIRCUIT ARE REMOVED AS PART OF DEMOLITION.
11. COORDINATE LOCATION OF LIGHTING FIXTURES, CONDUIT, EQUIPMENT/DEVICES WITH OTHER TRADES INCLUDING ARCHITECTURAL DETAILS.
12. EC TO PROVIDE FIRE-STOPPING FOR ALL NEW ELECTRICAL WORK THAT PENETRATES A FIRE SEPARATION.
13. EC TO MOUNT ELECTRICAL OUTLETS AT 18" AFF TO CENTERLINE AND 42" AFF AT COUNTERS TO CENTERLINE, UNLESS NOTED OTHERWISE. COORDINATE ALL POWER OUTLETS WITH ARCHITECTURAL CASEWORK DETAILS.
14. EC TO MOUNT LIGHT SWITCHES AT 42" AFF TO CENTERLINE, UNLESS NOTED OTHERWISE.
15. COORDINATE LIGHTING FIXTURES WITH ARCHITECTURAL CEILING PLANS AND DETAILS. POINT OUT ANY DISCREPANCIES BETWEEN CEILING TYPES AND SPECIFIC FIXTURE MOUNTING REQUIREMENTS TO ARCHITECT PRIOR TO FIXTURE SUBMITTAL.
16. CONDUIT SHALL NOT BE EXPOSED IN FINISHED AREAS.
17. EC TO PROVIDE NEW CABLE OUTLET COVERS, PHONE OUTLET COVERS, BLANK-OFF COVERS, ETC. THROUGHOUT ALL APARTMENTS. COLOR AS SELECTED BY OWNER/ARCHITECT.
18. EC IS RESPONSIBLE FOR ALL ELECTRICAL WORK ON E-301 AND E-302 ALONG WITH WORK INDICATED FOR THE DOMESTIC HOT WATER DISTRIBUTION SYSTEM SHOWN ON PLUMBING DRAWINGS (P-001, P-201, P-202, P-203.), AND THE HVAC SYSTEM SHOWN ON HVAC DRAWINGS (M-001, M-101, M-102, M-103.)
19. REFER TO ENLARGED PLANS A-601, A-602, A-603 AND A-604 FOR ADDITIONAL ELECTRICAL WORK & COORDINATION INCLUDED WITH ELECTRICAL CONTRACTOR'S SCOPE OF WORK.
20. AT ALL TYPICAL APARTMENTS, EC TO REPLACE EXISTING 120 VOLT SMOKE DETECTORS WITH BATTERY BACK-UP UNIT.
21. EC TO PROVIDE 120V SMOKE/STROBE UNITS FOR ACCESSIBLE APARTMENT UNITS (2ND THROUGH 8TH FLOORS).
22. EC TO PROVIDE BUILDING FIRE ALARM STROBE UNITS FOR ACCESSIBLE APARTMENT UNITS (2ND THROUGH 8TH FLOORS).
23. EC TO DISCONNECT EXISTING POWER TO EXISTING (MAU) MAKE UP AIR UNIT ON THE ROOF. SEE DRAWING M-001 AND M-201
24. EC TO PROVIDE ELECTRIC CONNECTIONS TO (MAU-1) MAKE UP AIR UNIT ON THE ROOF. SEE DRAWING M-001 AND M-201
25. EC TO PROVIDE NEW DISCONNECT FOR MAU-1 ON THE ROOF. SEE DRAWING M-001 AND M-201
26. EC TO WIRE SMOKE DETECTOR FROM MAU-1 TO FIRE ALARM SYSTEM. MC TO FURNISH & INSTALL SMOKE DETECTOR. EXISTING FIRE ALARM SYSTEM IS A SIMPLEX SYSTEM. CONTACT SHON MENTZELL. (724)961-6544

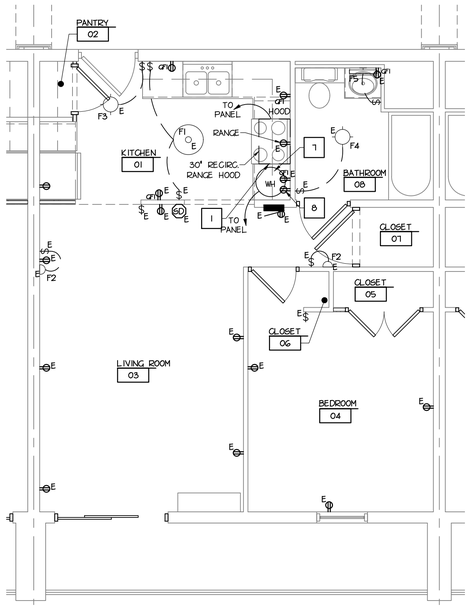

3 E-302 APARTMENT TYPE 'A' - LIGHTING & POWER PLAN

SCALE: 1/4" = 1'-0"

PLAN NORTH

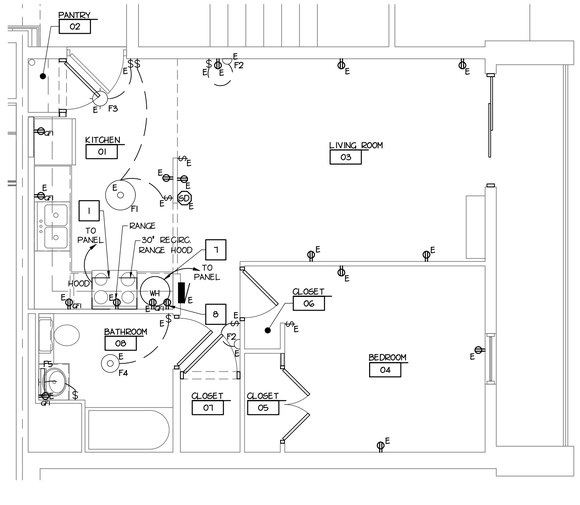

4 E-302 APARTMENT TYPE 'B' - LIGHTING & POWER PLAN

SCALE: 1/4" = 1'-0"

PLAN NORTH

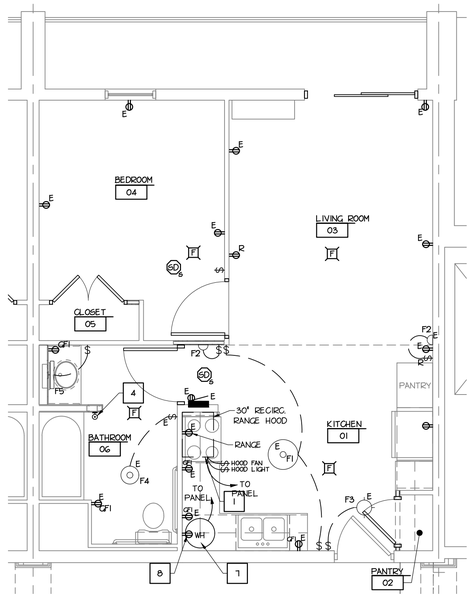

5 E-302 ACCESSIBLE APARTMENT - LIGHTING & POWER PLAN

SCALE: 1/4" = 1'-0"

PLAN NORTH

RW SLEIGHTER
ENGINEERS & ARCHITECTS
1060 EBERLY WAY
LEMONT FURNACE, PA 15456
Phone 724.438.4010
Fax 724.438.4017
info@rwsleighter.com
WWW.RWSLEIGHTER.COM

CONFIDENTIAL - ALL RIGHTS RESERVED

SEAL

PROJECT
LOYALHANNA APARTMENT RENOVATIONS
1111 JEFFERSON STREET
LATROBE, PENNSYLVANIA 15650

OWNER
WESTMORELAND COUNTY HOUSING AUTHORITY
167 SOUTH GREENGATE ROAD
GREENSBURG, PENNSYLVANIA 15601

REVISION

NO.	DATE	DESCRIPTION

DATE	PROJECT NUMBER
MAY 6, 2019	R17-077-04

DESIGNED	DRAWN	CHECKED
----	----	----

SHEET NAME
ELECTRICAL - ENLARGED LIGHTING & POWER PLANS

SHEET NUMBER
E-302

P:\077 - Westmoreland County Housing Authority\R17-077-04 - WCHA Loyalhanna\Dwg\Sheets\E-302.dwg, Date: 5/8/2019 4:07:47 PM, Plotted By: SEAN KEIFFER